Hoval

solutions

Equilibrium – a European benchmark for sustainable office and living environments in Bucharest

Dear Reader,

We are delighted to welcome you to the second edition of Hoval “Solutions”.

In this issue, we show you solutions that will prepare you for the rapid changes that are set to occur in building technology in the future. Increasing requirements for efficiency, comfort and sustainability, more complex specifications and more demanding projects – the challenges are clear. For planners, architects, installers and operators, this means that today's decisions will shape buildings for decades to come.

Hoval is your reliable partner in this.
What makes us special?

We consistently focus on holistic solutions for a renewable future – heat pumps, efficient control technology, technologies for ventilation and fresh water. Our innovative, tested systems ensure that small and large systems in new and existing buildings run economically and safely. For maximum energy efficiency, lasting cost benefits and sustainable environmental protection.

Our expertise and strength are reflected in “Solutions”. With technical backgrounds, practical specialist impulses and reference systems that make knowledge directly applicable to your planning.

We hope that the following pages will provide you with practical suggestions and guidance for your projects.
Let's shape the future together!

With best wishes,

Harald Verling
Hoval Aktiengesellschaft, Vaduz

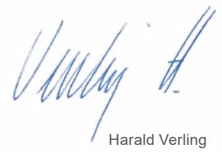

Harald Verling
Export Manager
Hoval Aktiengesellschaft

www.hovalpartners.com

LEGAL INFORMATION
Insights – the Hoval Group magazine.

PUBLISHER
Hoval Aktiengesellschaft

IMAGES
Hoval

Online edition available at hoval.com

carbon neutral
print production
natureOffice.com | CH-077-915416

6 | Hoval expertise & responsibility
We practise what we promise.

8 | Heat pump system heats, cools and ventilates the new PMS production hall

10 | A sports hall with an efficient and sustainable hybrid heating system
This multi-purpose hall in La Bruyère, Belgium, features a highly reliable heating system comprising the Hoval Belaria® fit heat pump and the Hoval UltraGas® 2 gas boiler.

16 | The “big” heat pump with a small footprint
Water is the basis of life – and the expertise of Heusser Water Solutions AG.

20 | Innovative domestic hot water solution

22 | High-performance comfort ventilation
In Dübendorf, the three new towers “ThreePoint” dominate the skyline of Dübendorf. The three roofs cover a total of 445 apartments.

24 | Business hotel: Sustainable heating with a complete solution.
“Montfort – das Hotel” in Feldkirch Vorarlberg.

26 | Hoval webinars
Experience our accumulated expertise.

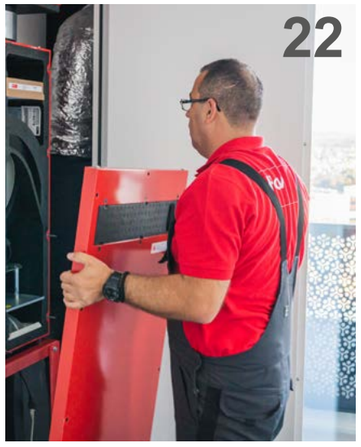

Hoval expertise & responsibility

We practise what we promise.

Hoval is one of the leading international companies for heating and indoor climate solutions with more than 80 years of experience.

As a family business, we focus on integrity, customer orientation and respectful treatment. Our workforce of more than 2,500 people in 15 Group companies worldwide has always shared a strong “We” culture – with open communication and a deeply rooted principle of “You Are Not Alone”.

From the first pioneering heat pump in 1976 to the patented TurboFer® heat exchanger and our quietest A+++ heat pumps. Completely “Made in Europe” and manufactured with the highest precision, our heating and indoor climate systems are exported to over 50 countries.

Sustainability and responsibility for the environment and energy are just as important to us. Hoval heat pumps offer impressive COP values above 4, GWP values close to zero thanks to natural refrigerants and minimal noise emissions. Our innovations create system solutions for heating, cooling, ventilation and water – with high quality, low emissions and maximum flexibility for both new and existing buildings.

Discover our Hoval Green Factory in Germany

From Values to Production Reality

With new production facilities, we are further expanding our sustainable manufacturing capabilities.

- ePlant Istebné with an area of 19,200 m² and a 400 kWp PV system produces up to 32,000 heat pumps per year.
- YADOS Green Factory Hoyerswerda with 24,000 m² and 1,500 solar modules expands our capacities for district heating technology, sustainable heating solutions and international growth.

We use our strengths to provide you with competent support as a partner: with individual advice, product selection, CAD planning, practical webinars, on-site engineering and commissioning, we accompany you through every project phase.

ePlant – The New Hoval Production Site

Why Hoval? Because we turn your projects into buildings of reference with our values, our innovative strength and our European production: buildings that are not only energy-efficient and comfortable, but will also set the highest standards for generations to come.

The following projects show how we work, and what our clients gain from it.

In demanding projects, real-world performance matters more than theory. Our reference projects demonstrate what Hoval system solutions deliver in continuous operation – from large-scale installations with fully integrated building technology to compact solutions with a small footprint that meet the highest standards of efficiency, sustainability and reliability.

Heat pump system heats, cools and ventilates the new PMS production hall

Industrial specialist PMS Elektro- und Automationstechnik, based in Lavanttal in Carinthia, opted for a system solution with a heat pump from Hoval when building the new production hall - this ensures a perfect indoor climate.

In the course of building the new production facility, the decision was taken to choose a modular solution from Hoval, which combines all three requirements – heating, cooling and ventilation of the hall – in one system. Since September 2019, two RoofVent® and twelve TopVent® units, each in combination with a heat pump, have been providing fresh air and comfortable temperatures in the 8,500 m² hall.

Excellent working conditions for employees.
There are around 120 employees in the new hall during the working day. A pleasant working atmosphere was the top priority for the PMS management: “When companies talk about creating a good workplace atmosphere, many only think of employees in the office. Far too often, those who work in production halls are neglected. It is important to us that the entire workforce feels comfortable and finds ideal room conditions for the respective work.” With the Hoval indoor climate system, the temperatures in the hall – depending on the zone – can be adjusted easily, individually and quickly.

Decision for Hoval

Underfloor heating and cooling were originally planned for the new hall. In the course of the project, PMS again intensively examined various indoor climate solutions and finally decided on the decentralised heat pump system from Hoval. Because the planning of the new building was already well advanced, Hoval had to act quickly

RoofVent® RP part of the decentralised indoor climate solution from Hoval

On-Demand: Hoval air/water heat pumps for large buildings – efficient, economical, and quiet

Sustainable operation with smart heat pumps

All installed RoofVent® and TopVent® units are combined with 30 kW heat pumps. The air-source heat pumps automatically adjust their output to the heating or cooling requirements of the building at any given time. “The decisive reason for choosing Hoval as a partner was the possibility of combining with a photovoltaic system, which we will soon integrate on the roof. We then use all of the generated electricity to operate the hall”s air conditioning system. Another factor was the flexible and simple modular system of the solution, which combines all our requirements,” says Krobath, pleased with the sustainable indoor climate solution.

> The time span for the entire project planning was very short – this was of course a challenge in order not to delay the construction. Thanks to simple planning and short production time of the modular Hoval system, PMS was able to start operations as planned.

Christoph Steinhäusler
Head of Product Management for
Air Conditioning Technology at Hoval.

A sports hall with an efficient and sustainable hybrid heating system

This multi-purpose hall in La Bruyère, Belgium, features a highly reliable heating system comprising the Hoval Belaria® fit heat pump and the Hoval UltraGas® 2 gas boiler.

An air/water heat pump and a gas condensing boiler work in perfect harmony to create the best possible indoor climate.

In this sports hall reference project, Hoval collaborated with its Belgian partner EDERGEN to create a sustainable, climate-friendly heating system, including water heating, in a state-of-the-art sports facility in Emines – a district of the municipality La Bruyère. A sophisticated hybrid system takes care of heat generation in the sports and multi-purpose hall, which also boasts an attractive, compact architectural design in the form of three nested cubes. The total heated area of the Hall Sportif de la Bruyère amounts to 2,136 m², with the heat diffused via water-based air heaters and radiators. In addition to heating the sports hall, the heating system also has to heat water for a total of 22 showers. The design temperature of the heat distribution system is 60°C. A minimum outdoor temperature of -9°C was taken as a basis for the system, resulting in a calculated heat load of 99 kW for the sports and multi-purpose hall.

The Belaria® fit air/water heat pump and the UltraGas® 2 gas condensing boiler form an efficient heating and hot water system

The output required to heat the sports hall changes with seasonal temperature fluctuations – the heat of summer and the cold that winter brings. The advantages of this efficient heating and hot water system are clear: if cold winter temperatures mean that the Belaria® fit air/water heat pump is no longer able to cover the required heat output, the UltraGas® 2 gas condensing boiler steps in to help ensure the necessary room temperature.

Belaria® fit: powerful and sustainable

With its two built-in compressors featuring inverter technology, the climate-friendly Belaria® fit (53) heat pump is capable of optimising its output to meet the prevailing heat demand. Unwanted on/off cycling is effectively prevented, stopping the negative impact this has on compressor lifetime when any heat pump is operated over an extended period.
While the heat pump is installed outside, the UltraGas® 2 with EnerVal and CombiVal ER can be found inside the sports facility.

Modulating Hoval UltraGas® 2 gas condensing boiler using propane as fuel

The intelligent heating system in the sports hall is a classic hybrid system, which means that it has two heat generators: a modulating UltraGas® 2 (125) gas condensing boiler is installed alongside the heat pump. The gas boiler is operated with propane. As an ecological alternative, the UltraGas® 2 can also be supplied with 100% biomethane or with 20% hydrogen added to natural gas or biomethane. The propane tank is concealed underground outside the sports hall.

83% of the energy-share of the heat pump of the annual heating energy covered by Belaria® fit heat pump

Using the Belaria® fit in a hybrid system enables 83% of the annual energy consumption for the building complex to be covered by the energy-efficient Belaria® fit with a heat load share of just 50% for the heat pump. This means that carbon emissions can be reduced with this hybrid system.

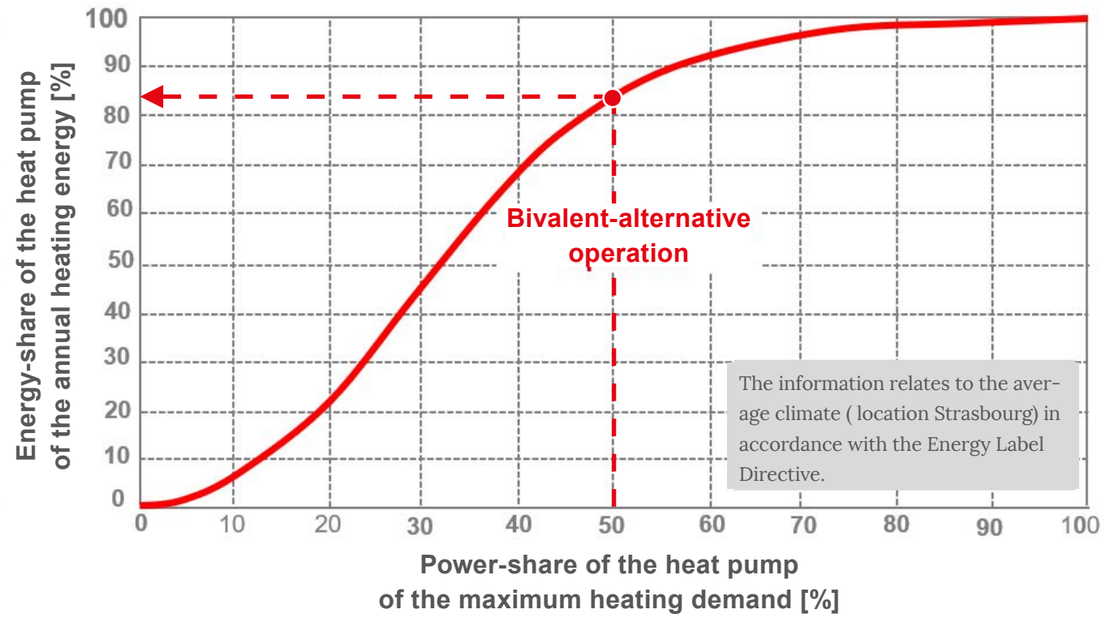

The information relates to the average climate (location Strasbourg) in accordance with the Energy Label Directive.

Hydraulic diagram

Example 1:
setpoint temperature is achieved by heat pump Hoval Belaria® fit.

The Belaria® fit heat pump heats the EnerVal buffer storage tank to the required setpoint temperature. Either the heating circuits or the CombiVal ER domestic water storage tank can now be supplied directly depending on the priority circuit.

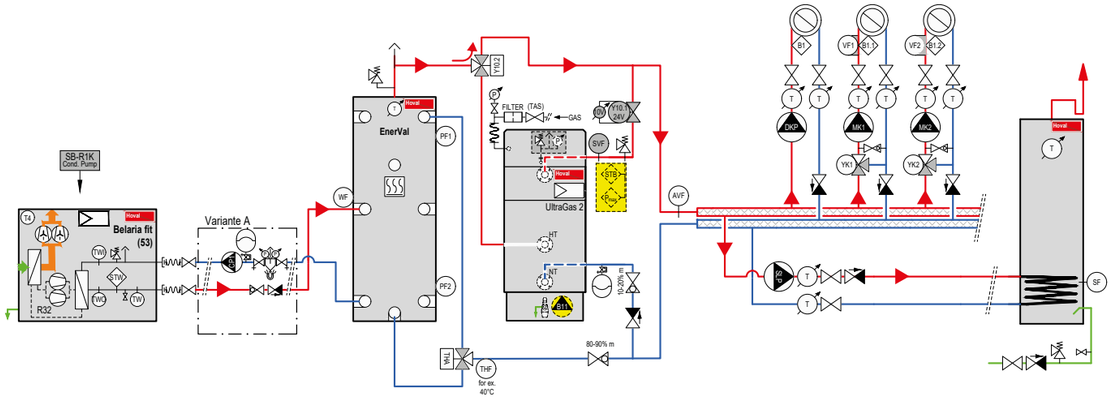

Example 2:
setpoint temperature is not achieved.

The Belaria® fit heat pump heats the EnerVal buffer storage tank but the required setpoint temperature is not achieved. The UltraGas® 2 gas condensing boiler therefore steps in and heats the heating water to the required setpoint temperature of 60°C. Either the heating circuits or the CombiVal ER domestic water storage tank can now be supplied directly depending on the priority circuit.

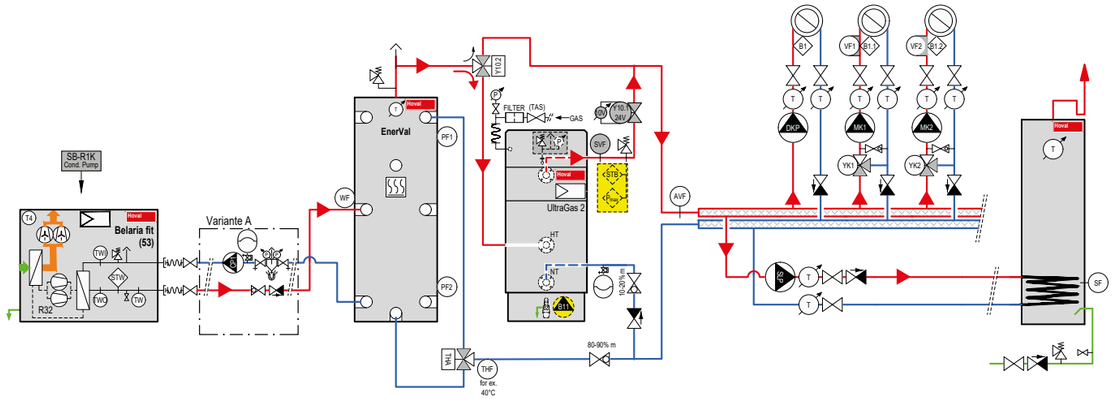

The UltraGas® 2 gas condensing boiler supports the powerful and energy-efficient Belaria® fit (53) heat pump

Intelligent hybrid solution for the bivalence range

The efficiency of any air/water heat pump will decrease at low outdoor temperatures. The bivalence point is the precise point at which it becomes advantageous – from the perspective of the overall heating system efficiency – to use a second heat generator in order to provide the total heat required.
The bivalence range (area shown in blue in the diagram below) is the range in which the second heat generator must cover the required heat load of the building. The UltraGas® 2, the second heat generator, is activated at the bivalence point – which always relates to an outdoor temperature.

A key advantage of a hybrid solution is that a lower heat pump output can be selected as a result. This reduces not only the investment costs but also the operating costs in comparison with a monovalent heat pump system. At temperatures above the bivalence point, the sports hall is supplied with renewable energy all year round. As the outdoor temperature increases, so too does the efficiency of the heat pump. Using this hybrid solution with a lower heat pump output also means that unwanted on/off cycling is prevented during the height of summer.
A further advantage is that having two heat generators increases the operational reliability of the system. If one heat generator fails, heat can still be supplied to the sports hall.

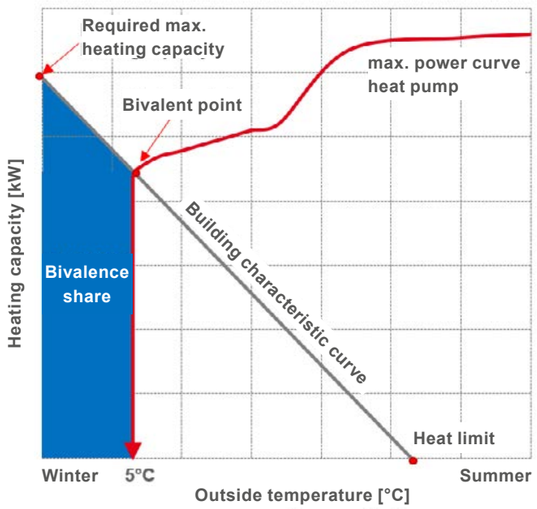

The features of the Belaria® fit air/water heat pump

The perfectly coordinated hybrid system – featuring a Belaria® fit (53) air/water heat pump in combination with an UltraGas® 2 (125) gas condensing boiler, an EnerVal (500) buffer storage tank and a CombiVal ER (500) – is a powerful and sustainable installation solution for the sports and multi-purpose hall in La Bruyère.

Furthermore, the Hoval Belaria® fit reversible heat pump is available in two output sizes and can be used in numerous projects requiring heating or cooling. The Belaria® fit uses the refrigerant R32 in its refrigeration circuit.

As an individual unit, the Belaria® fit has a heat output of up to 85 kW at an outdoor temperature of 2°C. Up to 16 units can be used simultaneously in a cascade configuration, corresponding to an output of 1,360 kW. As an energy-efficient and climate-friendly heating and cooling solution, the Belaria® fit is suitable for blocks of flats as well as large building complexes and sports or multi-purpose halls.

A perfectly coordinated duo

With the sustainable and ecologically efficient combination of the Belaria® fit air/water heat pump and the UltraGas® 2 gas condensing boiler taking care of its heating and hot water, the sports hall in La Bruyère benefits from a powerful, climate-friendly heating system with maximum supply security.

The bivalence range on the left with the building characteristic curve showing the relationship between heat pump output and outdoor temperature.

Heat Pump Production Facility
ePlant Istebné SK

The “big” heat pump with a small footprint

Water is the basis of life – and the expertise of Heusser Water Solutions AG.

The company was looking for an innovative and sustainable solution for the new heating system at its headquarters in Cham and found what had been sought at Hoval, where a new heat pump was being developed that excels in commercial buildings and apartment blocks in particular.

The issue of heating and cooling plays a key role in the energy transition. However, the question of how to move away from fossil energy sources while complying with increasingly restrictive standards remains a challenge for specialist planners, builders and investors. Those responsible at Heusser Water Solutions AG were faced with the same problem: how could they equip their headquarters in Cham with a modern and sustainable heating system that uses an environmentally friendly refrigerant and still provides the necessary heating and cooling capacity throughout the building?

‘At the time, we still had to develop the perfect answer ourselves,’ recalls Kevin Allenspach, Head of Product Management for Heat Pumps and Solar at Hoval Group. The use of a brine-water heat pump was not possible because there was no groundwater at the Heusser site. ‘That”s why the air heat pump approach became the main focus,’ explains Allenspach. However, the relevant product was still in development at this point – so Hoval, in consultation with Heusser Water Solutions AG, seized the opportunity to move the project forward together. The result of these efforts ultimately took shape in the form of the modern Belaria® pro (40,50) air/water heat pumps. ‘Previously, compromises always had to be made when it came to taking all aspects of the energy transition into account with a heating and cooling solution – but that is now a thing of the past.’ This is because Belaria® pro (40,50) offers everything that is needed at the heart of a future-orientated solution for multi-storey commercial and residential buildings: a natural refrigerant, a high flow temperature and quiet, cost-effective operation.

> With this solution, there is no longer any need to make compromises with regard to the energy transition.

Kevin Allenspach,
Head of Product Management for
Heat Pumps, Hoval Group

With their high efficiency, Belaria® pro (40,50) heat pumps are ideal for use in apartment blocks and commercial buildings. Installation of the systems is nevertheless relatively simple, and the same installation criteria apply as for smaller units. However, the installation effort is greatly reduced because the high-performance range of the Belaria® pro (40,50) means that fewer units are required to heat larger buildings. At Heusser Water Solutions AG, a Belaria® pro (50) 2-stage cascade achieves an output of almost 100 kW. In addition, the use of the environmentally friendly refrigerant propane (R290) has the advantage that it can be optimally compressed, which increases the flow temperature to an impressive 70 degrees (the standard for most systems is 50 degrees). And despite all this, the Belaria® pro (40,50) achieves a top rating in terms of noise: its large-area evaporators with low pressure loss ensure that even when mounted on a façade, it remains as quiet as a room fan.

The advantages of Belaria® pro (40,50) air/water heat pumps at a glance

- Highly efficient: meets the criteria for the highest energy efficiency class A+++ in low and medium temperature applications
- Low noise and vibration emissions
- High flow temperature of 70 degrees, also ideal for building renovations
- Already uses the natural refrigerant R290
- Up to four units can be easily combined in a cascade

The perfect control

But even the best and most efficient heat pump can only deliver its full benefits if the device is optimally configured, and its operation is constantly monitored. This is exactly where HovalSupervisor cloud comes in: as a modern control system, it enables the monitoring, control and optimisation of the entire heating and air conditioning technology in real time. This results in maximum efficiency, lower operating costs and maximum operational reliability. HSC is also used at Heusser Water Solutions AG, where it visualises the entire system. ‘If any irregularities occur, the system automatically triggers an alarm, enabling us at Heusser Water Solutions AG to respond immediately,’ explains Daniele Priore, Heusser Water Solutions AG.

The advantages of HovalSupervisor cloud at a glance:

- Clear and structured visualisation of all systems
- Control anytime, anywhere – even on the move with your smartphone
- Flexibly adaptable: can also integrate data sources from other manufacturers
- Web-based functionality offers cost advantages
- With the appropriate agreement, Hoval can perform rapid problem analysis and troubleshooting via remote access

SWITZERLAND

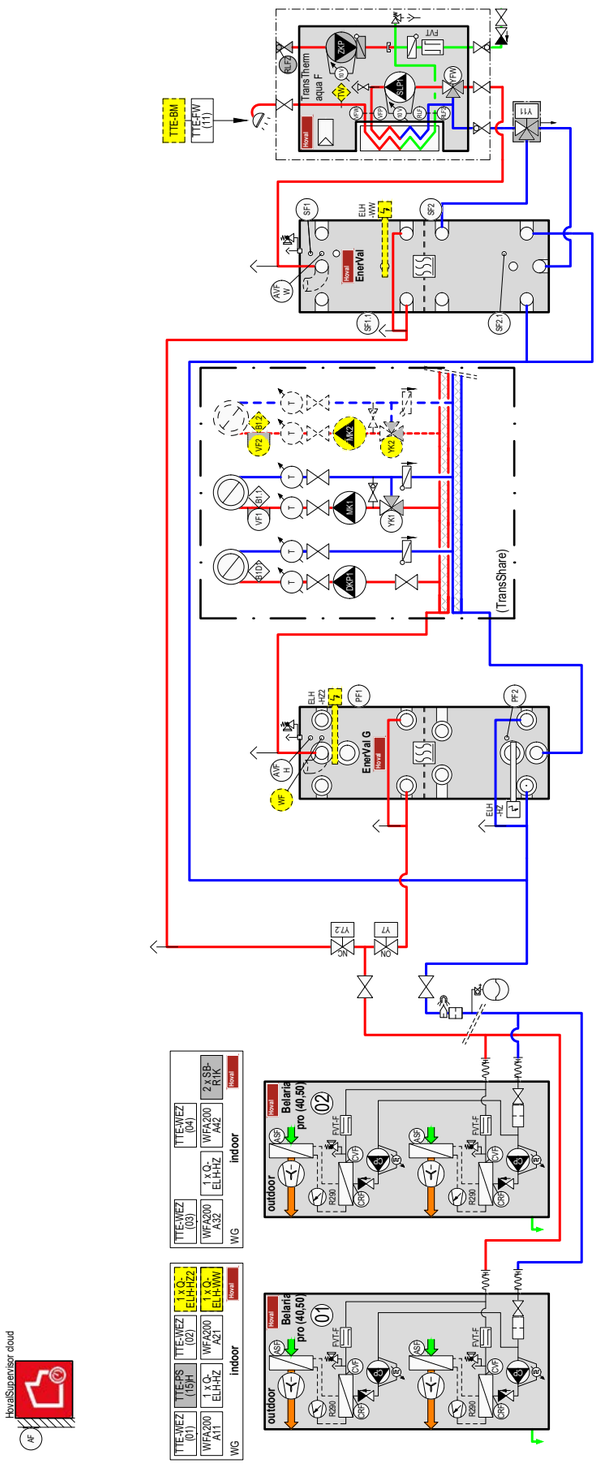

P&ID code: 2-BP4050-K3010

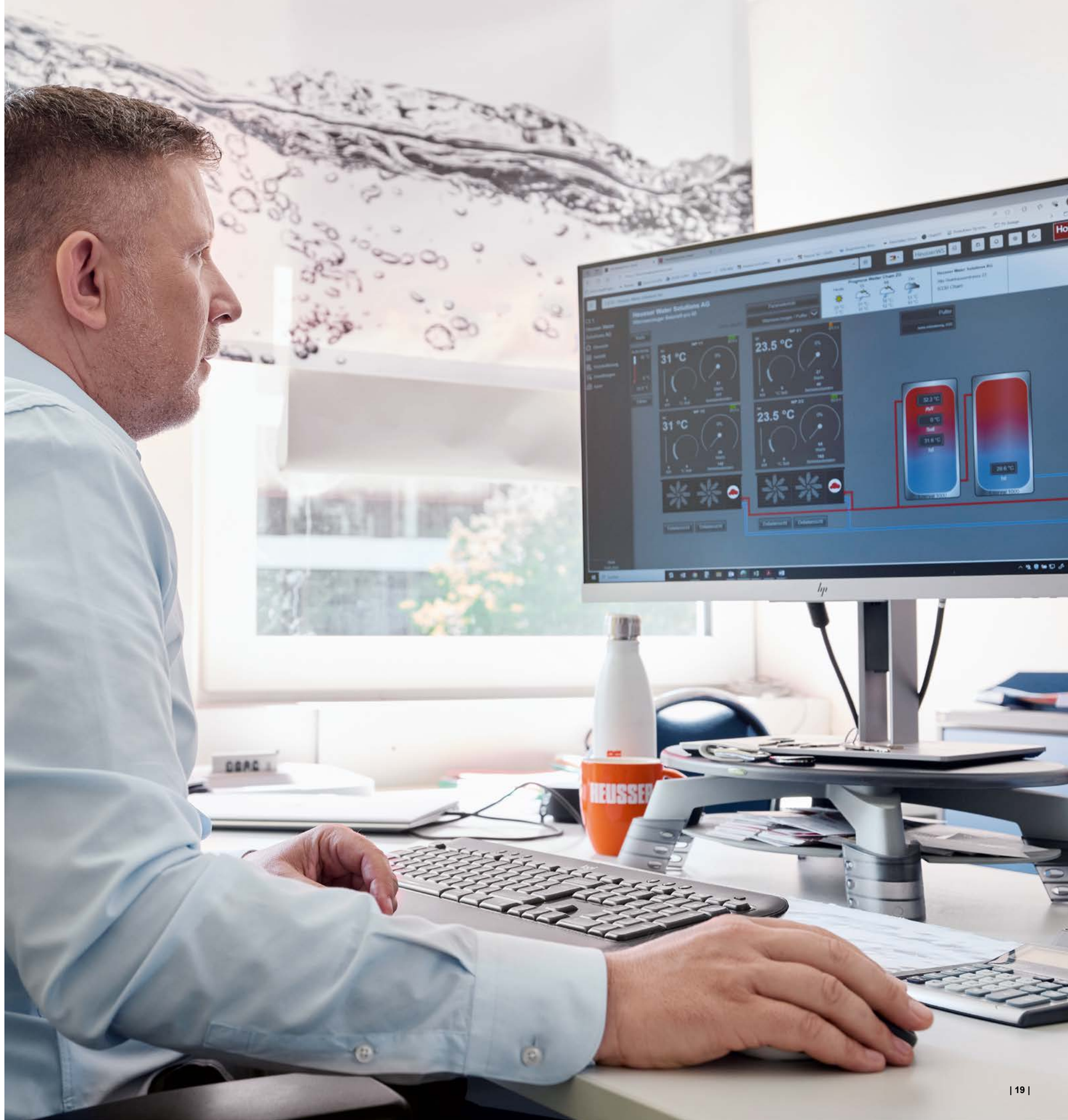

Innovative domestic hot water solution

Hotel Restaurant Fischer relies on a hygienic, energy-efficient domestic hot water solution with a modular fresh water station, heat pump and gas boiler.

The family-run Hotel Restaurant Fischer blends a sense of tradition with conveniences to suit today's needs. Directly opposite its historic main building with 30 rooms, the business has established a new 1,200 m² building containing 24 rooms with on-trend design features.

Having developed a strategy focused on sustainability, hotel owner Jörg Fischer decided to incorporate an innovative, eco-friendly domestic hot water solution from Hoval. The modular system ensures a year-round supply of domestic water that meets the highest standards of hygiene and hot water on tap – for added reliability and improved guest satisfaction.

Hygienic water heating using the continuous flow principle

At the heart of the system is the modular TransTherm® aqua F fresh water station, which works in conjunction with the ground source Thermalia® dual R (85) heat pump and the efficient wall-mounted TopGas® classic gas boiler to ensure hygienic domestic water heating in the hotel as needed.

The continuous flow heating principle prevents the need to store large amounts of hot water, minimising heat losses and providing an effective way of preventing legionella formation.

Ready to connect, the station performs thermostatic control of the water temperature by means of a quick-acting water temperature controller and features a copper-soldered stainless steel plate heat exchanger that monitors the constant flow temperature with precision.

Advantages at a glance

- Direct access to hot water at the required temperature.
- Integrated modular TopTronic® E control.
- High efficiency when a large amount of hot water is required.
- Compact construction as a complete unit with low space requirements – easy to integrate, even into existing structures.

Powerful, flexible and easy to integrate

With up to 700 kW of power and a flow rate of up to 207 litres per minute, the solution can adapt flexibly to water needs. The hot water temperature can be set between 45 and 60 °C. Interfaces for modern building management systems ensure seamless integration into the existing building services engineering.

The Thermalia® dual R (85) heat pump and the wall-mounted TopGas® classic gas condensing boiler are responsible for the supply of heat, with the latter ensuring a constant, reliable source of hot water thanks to its excellent energy efficiency. The modular system structure enables rapid installation, keeps downtimes to a minimum and makes planning significantly more reliable.

Seamless planning and professional installation

Austrian building services engineering specialist Caverion, a long-standing, experienced Hoval partner, took on the task of planning the technical elements as a whole and executing the project. With Hoval, Caverion and the hotel owners working closely together, the system was integrated seamlessly into the existing building services engineering.

Sustainability and cost-effectiveness combined

With Hoval's domestic hot water solutions, hotel operators benefit from significant reductions in energy consumption and long-term value retention. The modular technology makes maintenance and servicing easier, and ensures that everything runs in a way that is efficient and eco-friendly.

> We were wowed by the entire Hoval solution and Caverion's professional work in executing the project – from planning to commissioning.

Jörg Fischer, Managing Director & Owner
of Hotel Restaurant Fischer

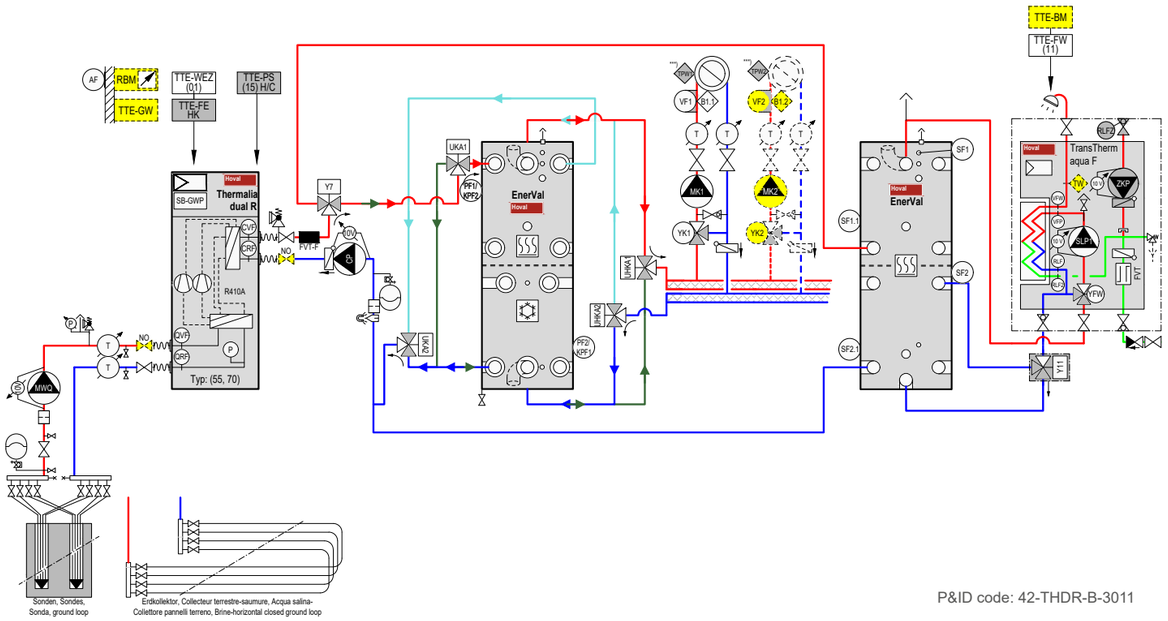

P&ID code: 42-THDR-B-3011

High-performance comfort ventilation

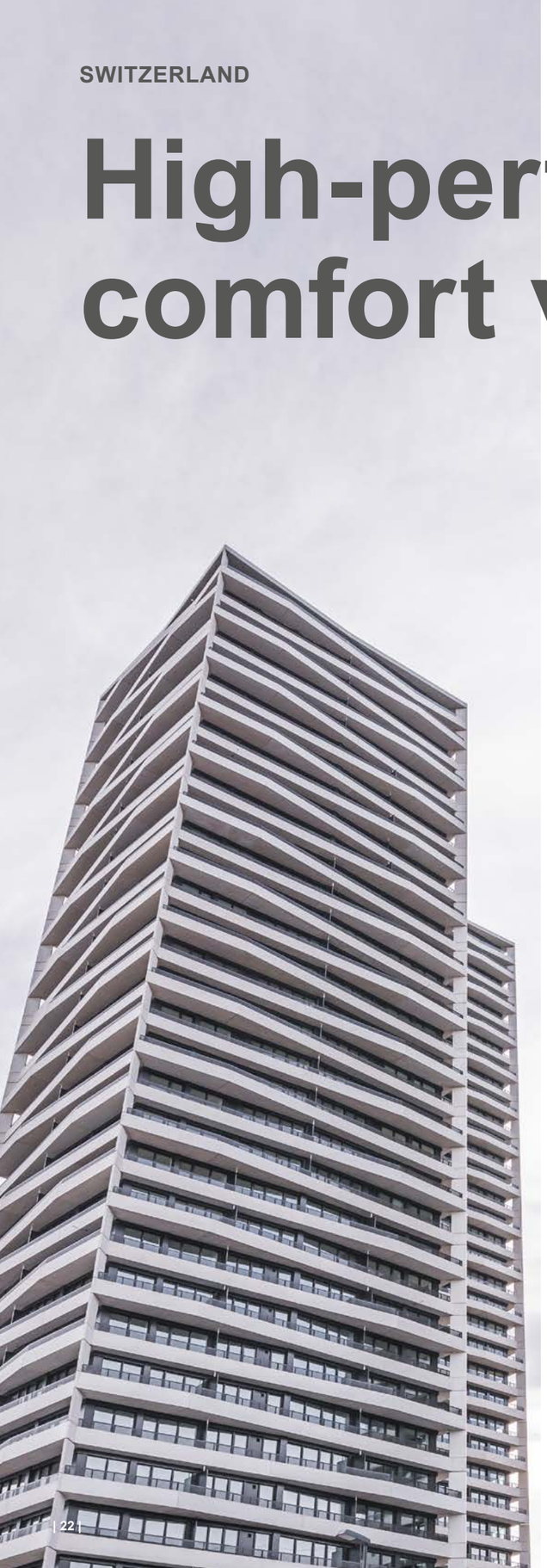

In Dübendorf, the three new towers “ThreePoint” dominate the skyline of Dübendorf. The three roofs cover a total of 445 apartments.

> The goal of this project was not only to build the tallest residential buildings in Switzerland but also to set a high standard for quality of life.
>
> Ronald Schmid, Project manager at ADT INNOVA

ADT INNOVA successfully relies on Hoval comfort ventilation systems.

From a distance, the three new towers “ThreePoint” dominate the skyline of Dübendorf. Standing at impressive heights of 102, 111, and 113 meters, the three roofs cover a total of 445 apartments. The project took three and a half years to complete and cost over 500 million Swiss francs.

The tallest residential buildings in Switzerland promise an unrivaled view of the idyllic Greifensee and the distant mountain ranges. The proximity to the airport and an urban environment complement the excellent location.

Hoval ensures a pleasant indoor climate

All apartments are equipped with Hoval HomeVent® comfort ventilation systems. These are standard in new buildings but are particularly useful in this case. Hoval regional manager Reto Nufer confirms: “Hoval comfort ventilation systems ensure a pleasant indoor climate – even at the highest heights.” The continuous supply of fresh air promises more comfort and also increases energy efficiency. “A high construction standard was particularly important to us. With Hoval HomeVent®, we found a product that fits perfectly into our concept.”

Due to their low noise emissions, Hoval comfort ventilation systems can be placed anywhere, making them extremely practical for planning. “The ventilation units are located in a closet – in the kitchen, living room, or even bedroom!” confirms Ronald Schmid. Additionally, each apartment has its own unit, allowing each party to control the ventilation independently.

Watch the video about the project

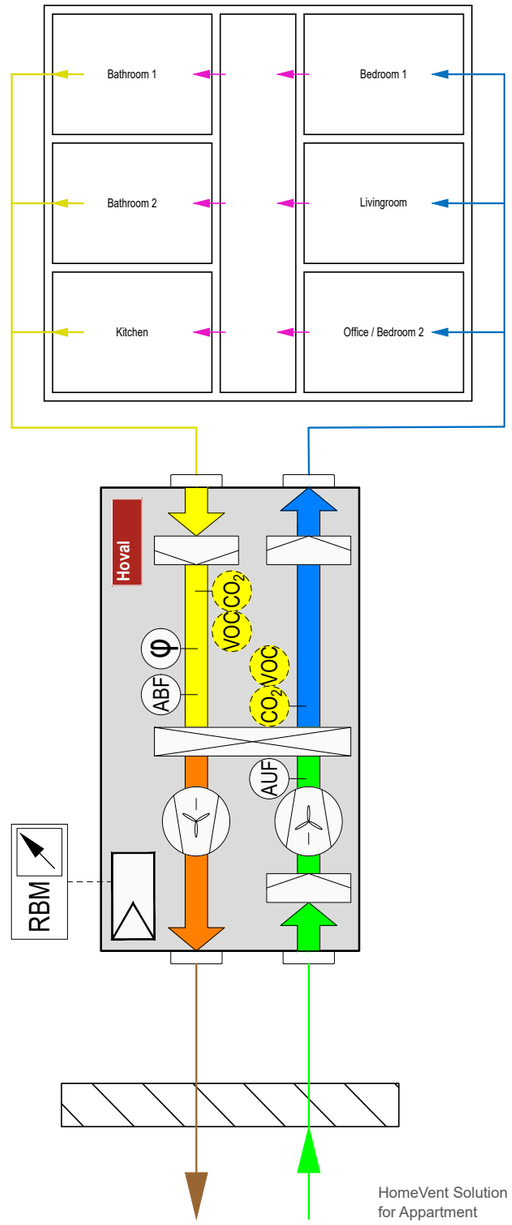

HomeVent Solution for Appartment

Business hotel: Sustainable heating with a complete solution.

“Montfort – das Hotel” in Feldkirch Vorarlberg.

Combining old and new buildings is a challenge for hotels. Business hotels in particular are required to meet the sustainability demands of their guests.

Hotelier Dieter Oberhöller has relied on Hoval as a reliable partner for heating and cooling for 30 years. This was also the case in 2015, with the latest expansion of his hotel. While the new building is heated entirely with sustainable energy from the Hoval Thermalia® dual R heat pump, the refurbished Hoval UltraGas® gas boiler optimally covers the heating requirements of the old building as well as consumption peaks.

In the expansion of the “Montfort – das Hotel”, Mr. Oberhöller opted for an integrated complete solution from Hoval.

Minimising energy costs

Dieter Oberhöller attaches great importance to developing his accommodation in a sustainable way. With the installation of a Hoval heat pump and gas heating, Mr. Oberhöller has managed to minimize energy costs considerably. At the same time, the complete solution provides even greater security in the heating of hot water. This means that there is no bottleneck even at peak consumption times, such as in the morning when everyone is showering at the same time.

> What mattered most to me was having everything from one source. One supplier, one service team, one point of contact. Hoval has met this requirement fully.
>
> Dieter Oberhöller
> Hotelier

Refurbishment without disrupting hotel operations

During the six-month construction period of the new building, the Hoval Thermalia® dual R heat pump based on geothermal energy was integrated in line with the conditions on site and the requirements of the hotel.
To this end, 16 probes were installed at a depth of around 130 meters during the deep drilling. With two separate heat pump circuits, the heat pump offers a particularly high level of operational reliability while at the same time utilizing ecological environmental energy.

The challenge during installation was to integrate the heating without disrupting ongoing hotel operations and to optimally coordinate the components of both heating systems.

Green business requires sustainable heating systems
More and more business clients are attaching great importance to hotels with a sustainability label. The requirements are comprehensive and extend to the operation of an environmentally friendly heating system. This was the decisive reason for investing in a Hoval Thermalia® dual R heat pump with a total heating output of 90 kilowatts.
Heating and cooling with energy from the earth

The possibility of also cooling the hotel with the Thermalia® dual R heat pump was of particular interest to Mr. Oberhöller. After all, while the focus is on heating the hotel from October to April, from May onwards the aim is to ensure a pleasantly cool indoor climate.

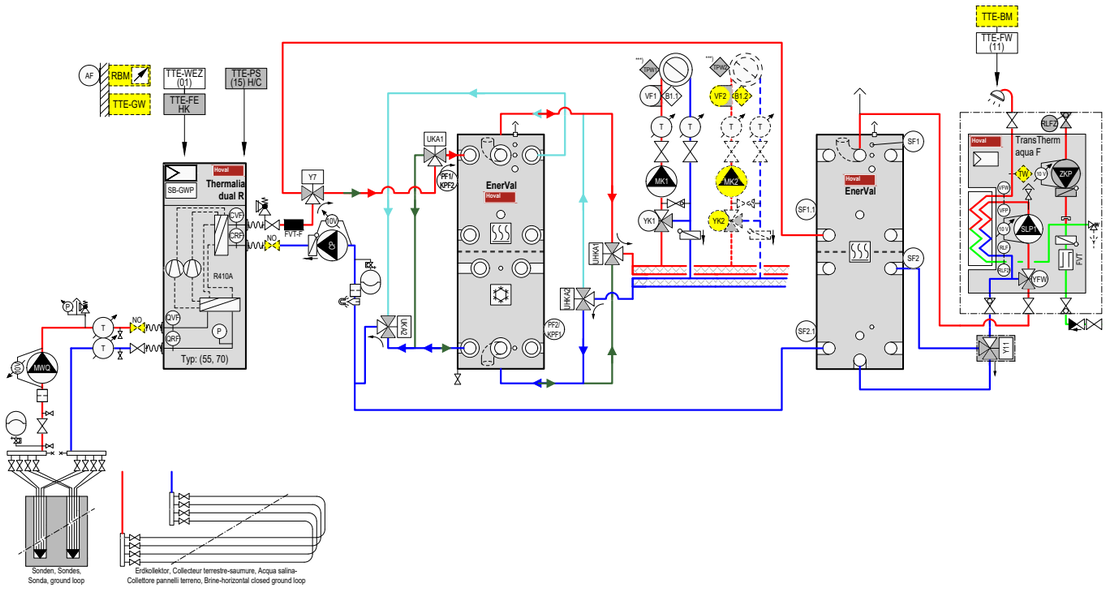

P&ID code: 42-THDR-B-3011

Hoval webinars

Experience our accumulated expertise.

Complex projects and changing requirements make up-to-date knowledge in building technology indispensable. With the Hoval webinars launched in 2025 at hovalpartners.com, we offer you a compact opportunity to deepen your knowledge in a targeted manner, irrespective of where you are.

All Hoval webinars can be used flexibly online – anywhere, anytime. The QR code takes you directly to the webinar page with dates, registration and the complete webinar media library.

Specific knowledge for your planning.

The current Hoval webinars On-Demand

- Using HomeVent® in apartment buildings – what planners need to know.
  Ventilation of large residential complexes: fresh air, humidity, noise.
- Domestic hot water – sustainable, safe, and economical with proven solutions from Hoval.
  Future-proof hot water planning: standards, system variants.
- Hybrid solutions - Efficient heat supply for new and existing buildings.
  Efficient heat supply: heat pump + gas condensing boiler, bivalence planning.
- Quick implementation and sustainable operation! Hoval heat pump solution heats, cools and ventilates new and existing production halls.
  Optimum indoor climate in halls: heating, cooling, ventilation.
- Hoval air/water heat pumps for large buildings – efficient, economical, and quiet.

Hoval Partners webinars at a glance

Hoval

Hoval is one of the leading international companies for heating and indoor climate solutions. Drawing on more than 80 years of experience and benefiting from a close-knit team culture, the Hoval Group delivers exciting solutions and develops technically superior products. This leadership role requires a sense of responsibility for energy and the environment, which is expressed in an intelligent combination of different heating technologies and customised indoor climate solutions.

Hoval also provides personal consultations and comprehensive customer service.
With around 2500 employees in 15 companies around the world, Hoval sees itself not as a conglomerate, but as a large family that thinks and acts globally.
Hoval heating and indoor climate solutions are currently exported to more than 50 countries.

Responsibility for energy and environment

Liechtenstein
Hoval Aktiengesellschaft
9490 Vaduz
export@hoval.com