Hoval

CATALOGUE

Indoor Climate Systems

1.10.2026

Indoor Climate Systems

Hoval TopVent® TV

Hoval TopVent® TW Pro

Hoval

CATALOGUE

Hoval TopVent® TV

Recirculation unit for heating spaces up to 6 m in height

Hoval | Responsibility for energy and environment

Efficient. Flexible. Reliable.

Hoval indoor climate systems are decentralised systems for heating, cooling and ventilating halls for industrial, commercial and leisure applications. The systems have a modular structure. One system comprises several ventilation units which are spread around the room. These units are equipped with reversible heat pumps for decentralised heat and cold generation, or they heat and cool with a connection to a central energy supply.
Tailored control systems complete the system and ensure the effective combination and optimal use of all resources.

Diverse range of units ensures flexibility
Different types of ventilation units can be combined to create the perfect system for the project in question:

- RoofVent® supply and extract air handling units
- TopVent® supply air units
- TopVent® recirculation units

The number of supply and extract air handling units depends on how much fresh air is required in order to create a comfortable atmosphere for people in the building. Recirculation units cover additional heat or cool demand as required. A broad range of unit types and sizes with heating and cooling coils in various output levels means that the overall output of the system can be scaled to whatever level is required.
Specially designed unit versions are also available for halls with particularly humid or oily extract air. Furthermore, there is a range of units available which have been expressly developed for very specific purposes. ProcessVent units, for example, are coupled with extract air purification systems in industrial halls and recover heat from process air.

Design and prices on request

Draught-free air distribution
A key feature of Hoval indoor climate units is the patented vortex air distributor, known as the Air-Injector. It is controlled automatically and changes the blowing angle of the air continuously between vertical and horizontal. The highly efficient air supply system has many advantages:

- It provides a high level of comfort during heating and cooling. No draughts develop in the hall.
- The efficient and even air distribution ensures that the indoor climate units cover a large area.
- The Air-Injector keeps the temperature stratification in the room low, thus minimising heat loss through the roof.

Control with specialist expertise
The TopTronic® C control system, which was specifically developed for Hoval indoor climate systems, regulates the separate units individually and controls them based on zones. This enables optimal adjustment to the local requirements of the different usage areas in the building. The patented control algorithm optimises energy use and ensures maximum comfort and hygiene levels.
Clear interfaces make it easy to connect the system to the building management system or to the HovalSupervisor cloud. This is a professional online control system for visualising and operating indoor climate systems via a browser.
Simpler control systems are also available for units that are only used for supply air or air recirculation.

Competent and reliable
Hoval will support you and provide expert knowledge throughout all project phases. You can rely on comprehensive technical advice when it comes to planning Hoval indoor climate systems and on the skills of the Hoval technicians during the installation, commissioning and maintenance of the system.

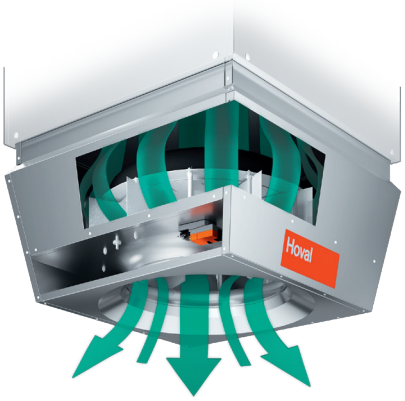

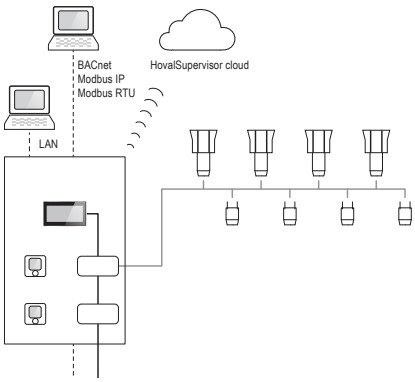

System with decentralised heat and cold generation with heat pump

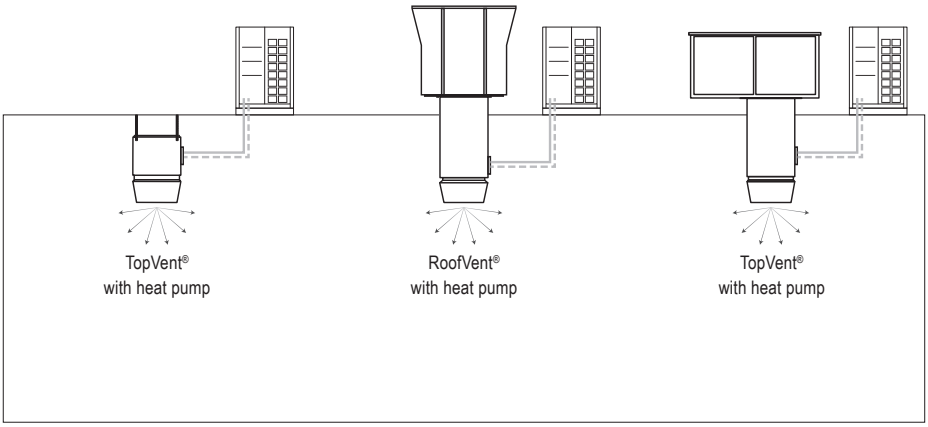

System with central heat and cold generation

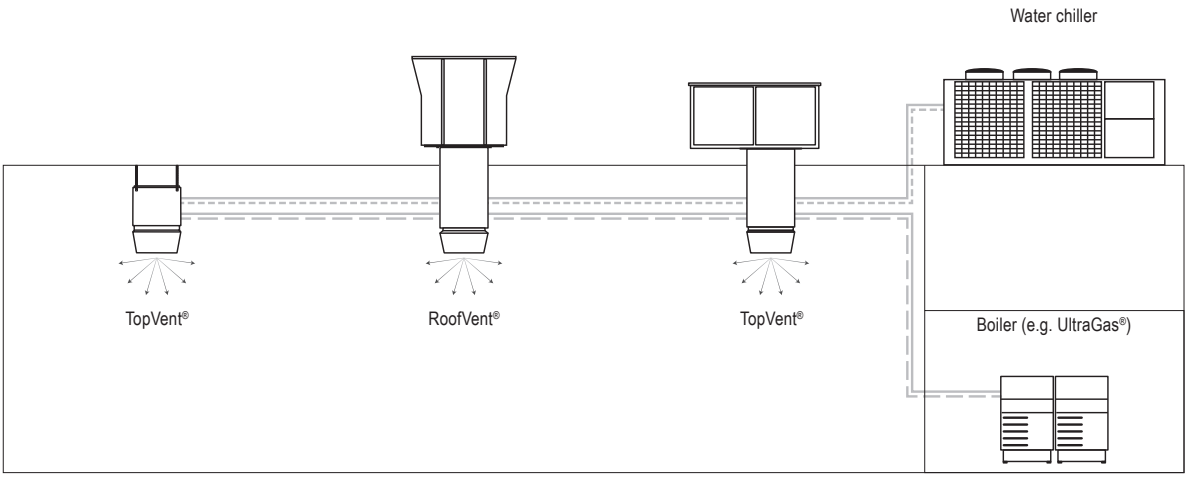

TopVent® TV

Recirculation unit for heating spaces up to 6 m in height

Decentralised heating system, developed for reliable and cost-effective heating of high spaces, consisting of:

- Heating coil consisting of copper tubes and aluminium fins
- Axial fan with energy-saving EC motor and flow-optimised fan blades, infinitely variable, maintenance-free and quiet with a high degree of efficiency
- Compact casing in modern industrial design, consisting of high-quality ABS, robust and easy to clean
- Suspension set for installing the unit on the ceiling or the wall
- Air outlet louvre with vanes for manual adjustment of air distribution

Functions:

- Heating (with connection to a hot water supply)
- Recirculation operation
- Air distribution via air outlet louvre

Type	Air flow rate (m³/h)	Heat output (kW)		Max. mounting height (m)	Max. reach horizontal (m)	Power consumption (kW)	Current consumption (A)
		50/40 °C	70/50 °C			(with 230V / 50Hz)	(with 230V / 50Hz)
TV-2	2100	6.1	9.7	5.5	14	0.10	0.51
TV-4	4850	15.0	23.3	5.5	22	0.25	1.30
TV-5	5700	21.8	35.0	5.5	25	0.37	1.70

Reference: Room temperature 18 °C

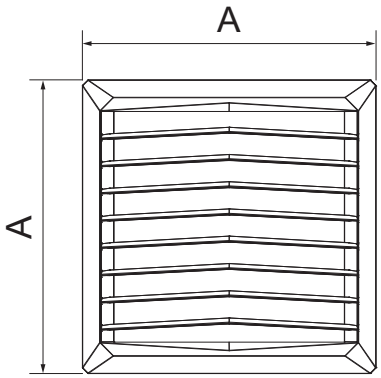

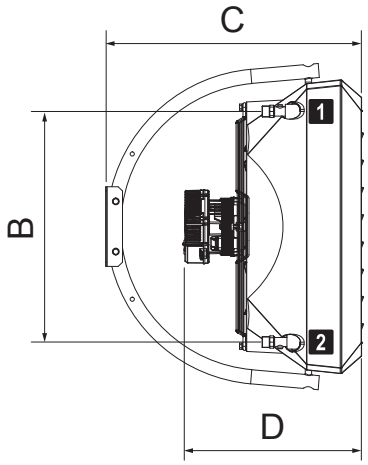

Type		TV-2	TV-4	TV-5
A	mm	530	700	700
B	mm	381	550	550
C	mm	517	610	610
D	mm	395	425	425
Water content of the coil	l	1.12	2.16	3.10
Connection (external thread)	″	¾	¾	¾
Weight	kg	16	23	24

1 Return
2 Flow

Recirculation unit

TopVent® TV

Sturdy casing made of ABS with pigment additive for UV protection, front in RAL 9016 (Traffic white) and back in RAL 7037 (Dusty grey); heating coil consisting of copper tubes and aluminium fins; axial fan with highly efficient EC motor, infinitely variable, maintenance-free and quiet, degree of protection IP 54, insulation class F; air outlet louvre with vanes for manual adjustment of air distribution; including suspension set for wall or ceiling installation. Electrical connection via connection box provided by the installer.

Type	Part No.
TV-2	7016 102
TV-4	7016 103
TV-5	7016 104

Control systems
EasyTronic EC

The EasyTronic EC is a room temperature controller with timer for TopVent® TH, TC, CH, CC, TV recirculation units and TopVent® TW Pro air curtains. The maximum number of units that can be connected to 1 controller is:
- 10 TopVent® recirculation units or
- 12 fans of TopVent® TW Pro air curtains

It fulfils the following functions:
- Recording the room temperature with the integrated temperature sensor
- Connection option for external room temperature sensor
- Room temperature control in on/off mode
- Lowering of the room temperature setpoint value via week programme
- Unit control depending on a door contact switch
- Manual adjustment of the fan speed
- Manual adjustment of air distribution with the Hoval Air-Injector from vertical to horizontal (for TopVent® TH, TC, CH, CC)
- Signal for switching a pump or a valve
- Fan off delay in cooling mode
- External heating/cooling changeover
- Alarm display
- Connection to the building management system via Modbus RTU

Control systems
EasyTronic TV

The EasyTronic TV is a basic room temperature controller without timer for TopVent® TV recirculation units and TopVent® TW Pro air curtains. The maximum number of units that can be connected to 1 controller is:
- 8 TopVent® TV recirculation units or
- 12 fans of TopVent® TW Pro air curtains

It fulfils the following functions:
- Recording the room temperature with the integrated temperature sensor
- Room temperature control in on/off mode
- Manual adjustment of the fan speed

Control systems

		Part No.
	EasyTronic EC Room temperature controller with timer and integrated room temperature sensor, for up to 10 TopVent® TH, TC, CH, CC, TV recirculation units or 12 fans of TopVent® TW Pro air curtains, degree of protection IP30 Type: ET-EC	2078 834
	Room temperature sensor ET-R for connection to the EasyTronic EC in place of the room temperature sensor that is integrated in the room temperature controller, in a plastic housing for wall-mounted installation, degree of protection IP65 Type: ET-R	2074 184
	EasyTronic TV Room temperature controller without timer, with integrated room temperature sensor, for max. 8 TopVent® TV recirculation units or 12 fans of TopVent® TW Pro air curtains, degree of protection IP30 Type: ET-TV	2078 427

Hoval quality.
You can count on us.

Hoval

Hoval is one of the leading international companies for heating and indoor climate solutions. Drawing on more than 80 years of experience and benefiting from a close-knit team culture, the Hoval Group delivers exciting solutions and develops technically superior products. This leadership role requires a sense of responsibility for energy and the environment, which is expressed in an intelligent combination of different heating technologies and customised indoor climate solutions.

Hoval also provides personal consultations and comprehensive customer service. With around 2500 employees in 15 companies around the world, Hoval sees itself not as a conglomerate, but as a large family that thinks and acts globally.
Hoval heating and indoor climate solutions are currently exported to more than 50 countries.

Responsibility for energy and environment

Liechtenstein
Hoval Aktiengesellschaft
9490 Vaduz
+423 399 24 00
hoval.com

United Kingdom
Hoval Ltd.
Newark Notts. NG 24 1JN
+44 1636 672 711
hoval.co.uk

2026 - 10 | Subject to modifications

Your Hoval partner

Hoval

CATALOGUE

Hoval TopVent® TW Pro

Air curtain

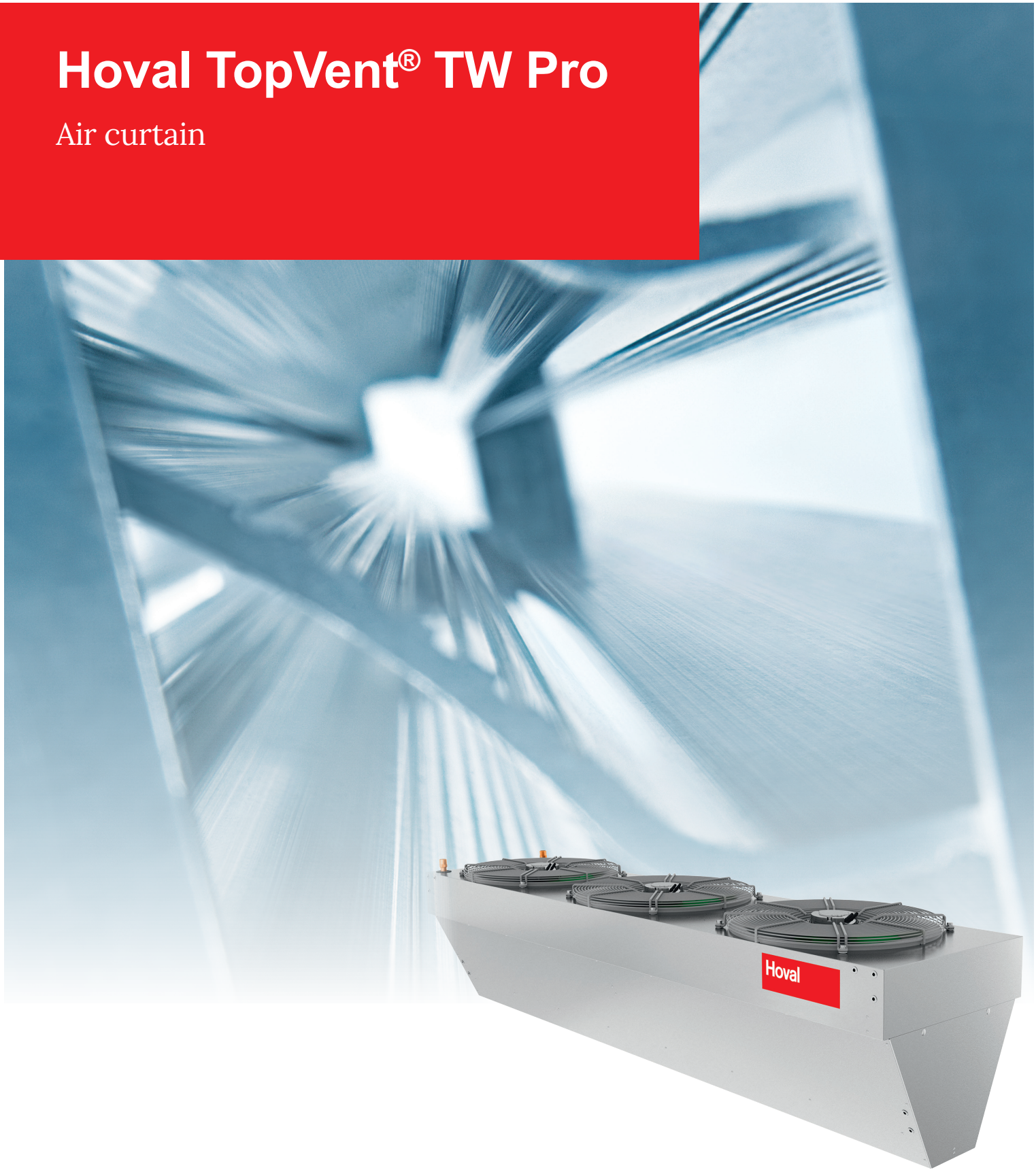

Hoval | Responsibility for energy and environment

Efficient. Flexible. Reliable.

Hoval indoor climate systems are decentralised systems for heating, cooling and ventilating halls for industrial, commercial and leisure applications. The systems have a modular structure. One system comprises several ventilation units which are spread around the room. These units are equipped with reversible heat pumps for decentralised heat and cold generation, or they heat and cool with a connection to a central energy supply.
Tailored control systems complete the system and ensure the effective combination and optimal use of all resources.

Diverse range of units ensures flexibility
Different types of ventilation units can be combined to create the perfect system for the project in question:

- RoofVent® supply and extract air handling units
- TopVent® supply air units
- TopVent® recirculation units

The number of supply and extract air handling units depends on how much fresh air is required in order to create a comfortable atmosphere for people in the building. Recirculation units cover additional heat or cool demand as required. A broad range of unit types and sizes with heating and cooling coils in various output levels means that the overall output of the system can be scaled to whatever level is required.
Specially designed unit versions are also available for halls with particularly humid or oily extract air. Furthermore, there is a range of units available which have been expressly developed for very specific purposes. ProcessVent units, for example, are coupled with extract air purification systems in industrial halls and recover heat from process air.

Design and prices on request

Draught-free air distribution
A key feature of Hoval indoor climate units is the patented vortex air distributor, known as the Air-Injector. It is controlled automatically and changes the blowing angle of the air continuously between vertical and horizontal. The highly efficient air supply system has many advantages:

- It provides a high level of comfort during heating and cooling. No draughts develop in the hall.
- The efficient and even air distribution ensures that the indoor climate units cover a large area.
- The Air-Injector keeps the temperature stratification in the room low, thus minimising heat loss through the roof.

Control with specialist expertise
The TopTronic® C control system, which was specifically developed for Hoval indoor climate systems, regulates the separate units individually and controls them based on zones. This enables optimal adjustment to the local requirements of the different usage areas in the building. The patented control algorithm optimises energy use and ensures maximum comfort and hygiene levels.
Clear interfaces make it easy to connect the system to the building management system or to the HovalSupervisor cloud. This is a professional online control system for visualising and operating indoor climate systems via a browser.
Simpler control systems are also available for units that are only used for supply air or air recirculation.

Competent and reliable
Hoval will support you and provide expert knowledge throughout all project phases. You can rely on comprehensive technical advice when it comes to planning Hoval indoor climate systems and on the skills of the Hoval technicians during the installation, commissioning and maintenance of the system.

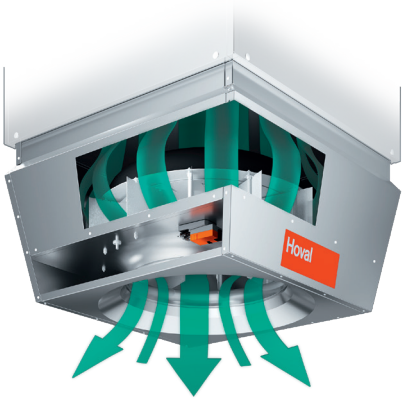

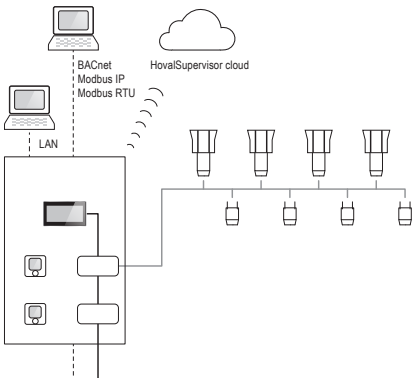

System with decentralised heat and cold generation with heat pump

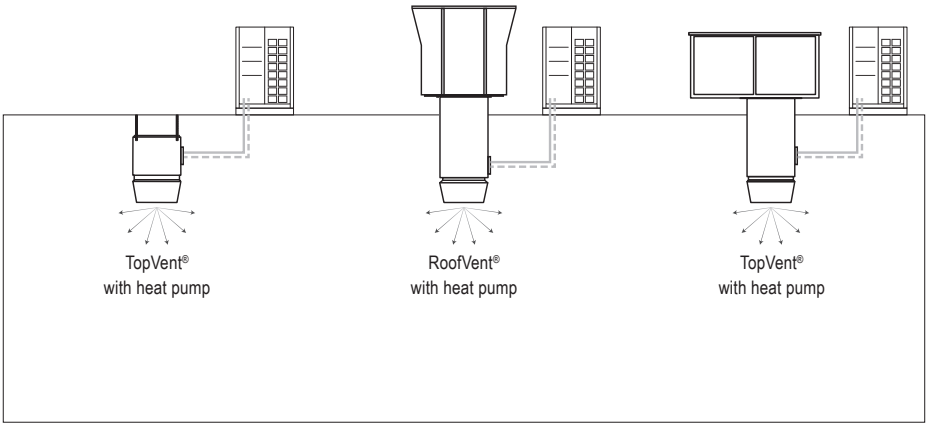

System with central heat and cold generation

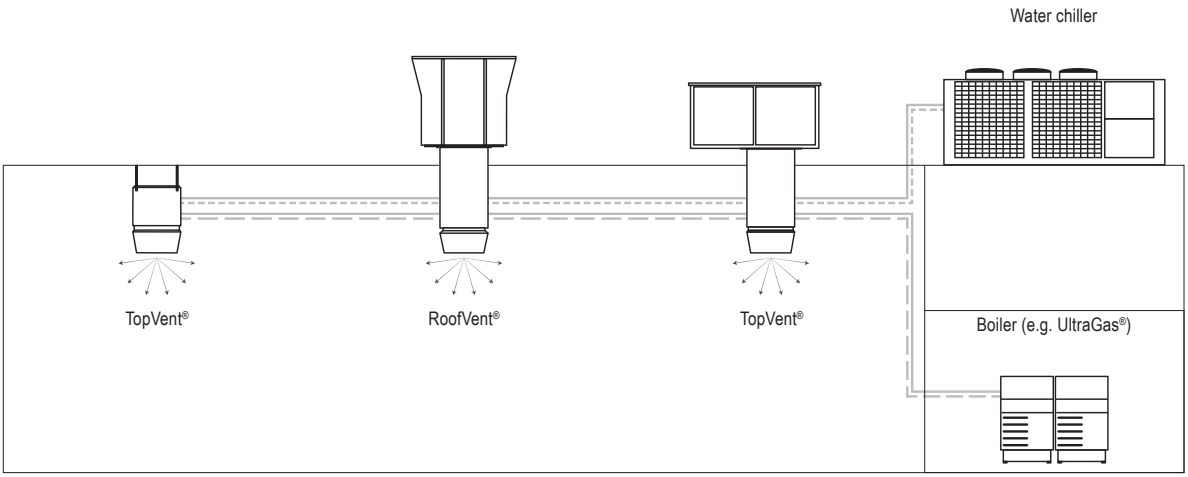

TopVent® TW Pro
Air curtain

Air curtain, developed for reliable and cost-effective protection of entrance areas against the cold, consisting of:
- Axial fan with energy-saving EC motor, infinitely variable, maintenance-free and quiet with a high degree of efficiency
- Heating coil consisting of copper tubes with aluminium fins (depending on unit type)
- Compact casing made of galvanised sheet steel
- Outlet grid

Functions:
- Heating (with connection to a hot water supply)
  (only TW Pro 150-1, 200-1, 150-2, 200-2)
- Recirculation operation
- Air distribution via outlet grid

Type	Air flow rate (m³/h)	Heat output (kW)		Maximum reach (m)	Airflow width (m)	Power consumption (kW)	Current consumption (A)
		50/40 °C	70/50 °C			(with 230V / 50Hz)	(with 230V / 50Hz)
TW Pro 150-0	8500	–	–	8.0	1.5	2 × 0.25	2 × 1.30
TW Pro 200-0	12800	–	–	8.0	2.0	3 × 0.25	3 × 1.30
TW Pro 150-1	7900	7.8	15.3	7.5	1.5	2 × 0.25	2 × 1.30
TW Pro 200-1	11900	9.8	21.7	7.5	2.0	3 × 0.25	3 × 1.30
TW Pro 150-2	7300	13.2	26.8	7.0	1.5	2 × 0.25	2 × 1.30
TW Pro 200-2	10700	20.1	41.2	7.0	2.0	3 × 0.25	3 × 1.30

Reference: Room temperature 18 °C

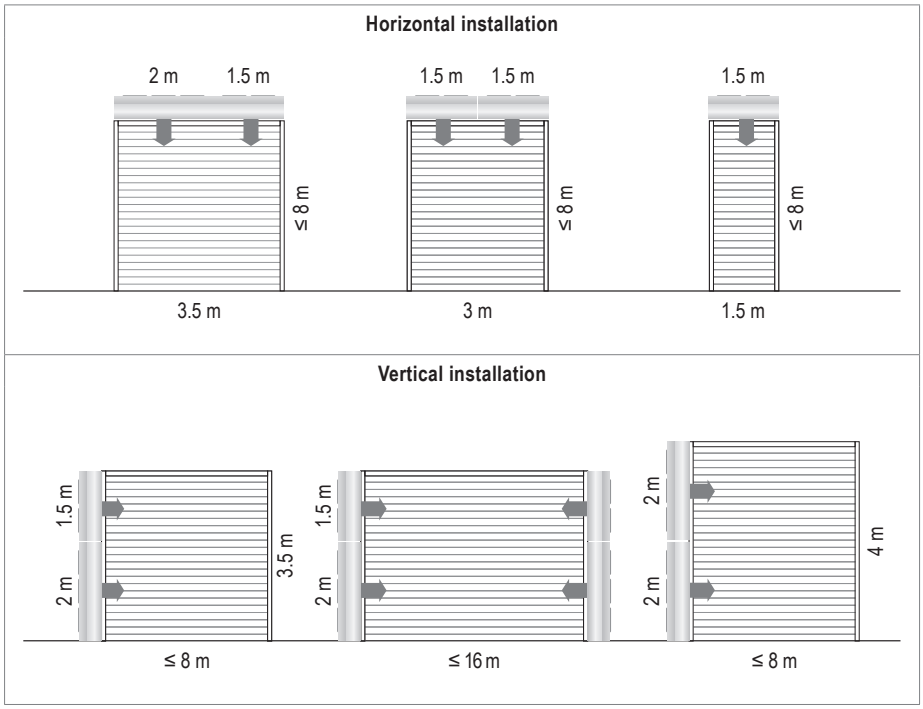

Examples of horizontal and vertical installation

TopVent® TW Pro 150

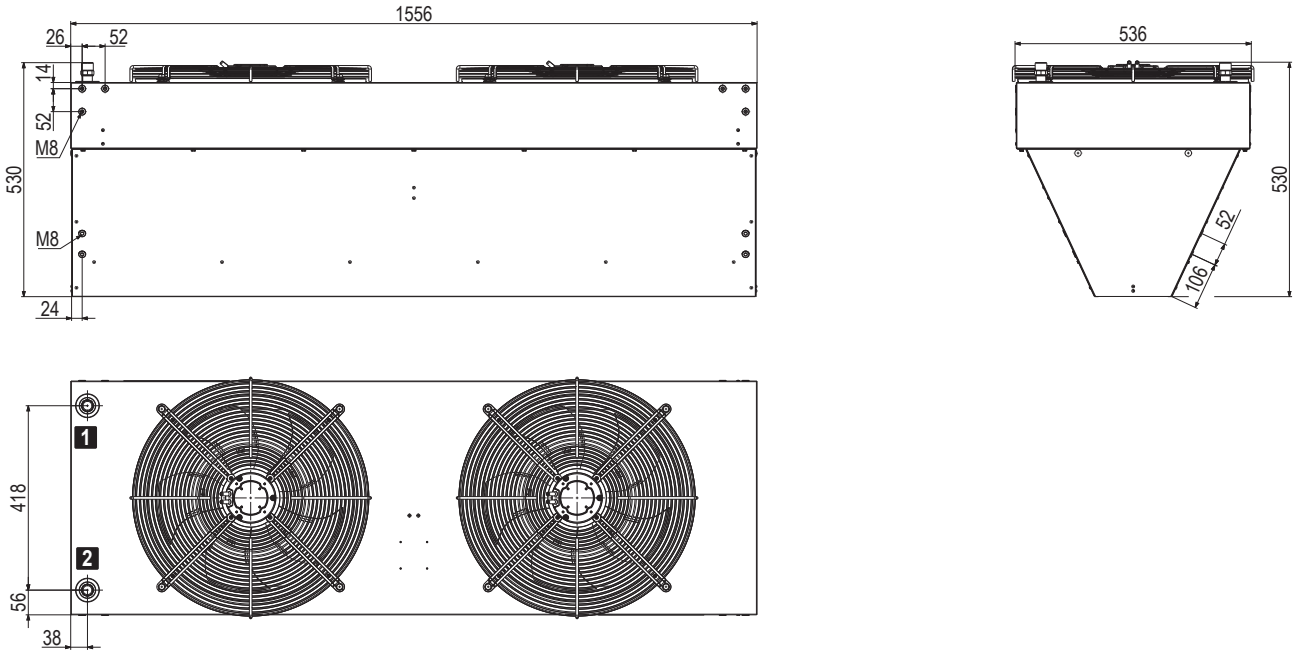

TopVent® TW Pro 200

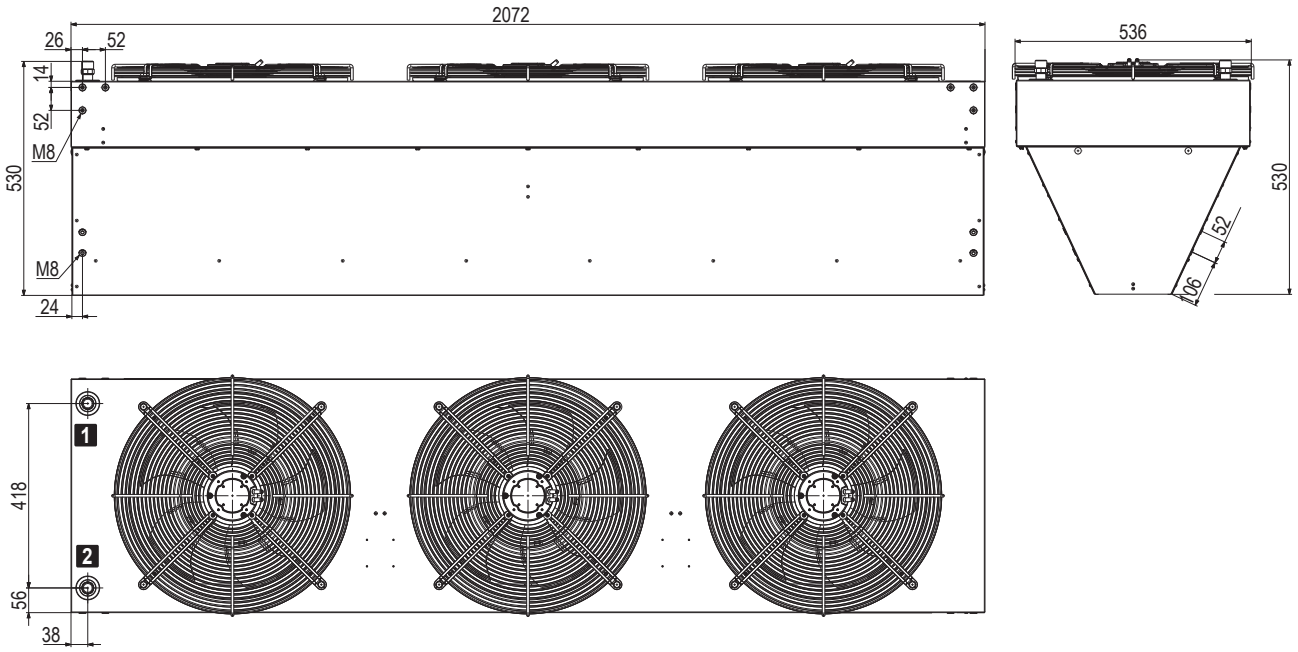

1 Flow
2 Return

Unit type		150-0	200-0	150-1	200-1	150-2	200-2
Water content of the coil	l	–	–	1.6	2.0	2.8	3.9
Connection (external thread)	"	–	–	R ¾	R ¾	R ¾	R ¾
Weight	kg	43.4	58.3	50.5	66.1	53.6	69.6

Air curtain

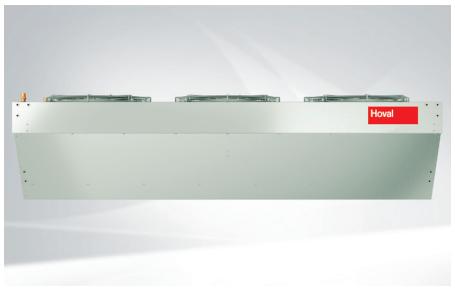

TopVent® TW Pro – Air curtain

Sturdy casing made of galvanised sheet steel, heating coil consisting of copper tubes and aluminium fins; axial fan wit highly efficient EC motor, infinitely variable, maintenance-free and quiet, degree of protection IP54, insulation class F, surface-mounted connection box for connecting the power supply and fan control; including mounting material (4 mounting brackets, 2 flat connectors, 12 M8 threaded bolts). On site: M8 threaded rod for horizontal or vertical installation of the unit with a minimum distance of 0.4 m to the ceiling or wall.

Type	Part No.
TW Pro 150-0	7019 438
TW Pro 150-1	7019 439
TW Pro 150-2	7019 440
TW Pro 200-0	7019 441
TW Pro 200-1	7019 442
TW Pro 200-2	7019 443

Control systems
EasyTronic EC

The EasyTronic EC is a room temperature controller with timer for TopVent® TH, TC, CH, CC, TV recirculation units and TopVent® TW Pro air curtains. The maximum number of units that can be connected to 1 controller is:
- 10 TopVent® recirculation units or
- 12 fans of TopVent® TW Pro air curtains

It fulfils the following functions:
- Recording the room temperature with the integrated temperature sensor
- Connection option for external room temperature sensor
- Room temperature control in on/off mode
- Lowering of the room temperature setpoint value via week programme
- Unit control depending on a door contact switch
- Manual adjustment of the fan speed
- Manual adjustment of air distribution with the Hoval Air-Injector from vertical to horizontal (for TopVent® TH, TC, CH, CC)
- Signal for switching a pump or a valve
- Fan off delay in cooling mode
- External heating/cooling changeover
- Alarm display
- Connection to the building management system via Modbus RTU

Control systems
EasyTronic TV

The EasyTronic TV is a basic room temperature controller without timer for TopVent® TV recirculation units and TopVent® TW Pro air curtains. The maximum number of units that can be connected to 1 controller is:
- 8 TopVent® TV recirculation units or
- 12 fans of TopVent® TW Pro air curtains

It fulfils the following functions:
- Recording the room temperature with the integrated temperature sensor
- Room temperature control in on/off mode
- Manual adjustment of the fan speed

Control systems

		Part No.
	EasyTronic EC Room temperature controller with timer and integrated room temperature sensor, for up to 10 TopVent® TH, TC, CH, CC, TV recirculation units or 12 fans of TopVent® TW Pro air curtains, degree of protection IP30 Type: ET-EC	2078 834
	Room temperature sensor ET-R for connection to the EasyTronic EC in place of the room temperature sensor that is integrated in the room temperature controller, in a plastic housing for wall-mounted installation, degree of protection IP65 Type: ET-R	2074 184
	EasyTronic TV Room temperature controller without timer, with integrated room temperature sensor, for max. 8 TopVent® TV recirculation units or 12 fans of TopVent® TW Pro air curtains, degree of protection IP30 Type: ET-TV	2078 427

Hoval quality.
You can count on us.

Hoval

Hoval is one of the leading international companies for heating and indoor climate solutions. Drawing on more than 80 years of experience and benefiting from a close-knit team culture, the Hoval Group delivers exciting solutions and develops technically superior products. This leadership role requires a sense of responsibility for energy and the environment, which is expressed in an intelligent combination of different heating technologies and customised indoor climate solutions.

Hoval also provides personal consultations and comprehensive customer service. With around 2500 employees in 15 companies around the world, Hoval sees itself not as a conglomerate, but as a large family that thinks and acts globally.
Hoval heating and indoor climate solutions are currently exported to more than 50 countries.

Responsibility for energy and environment

Liechtenstein
Hoval Aktiengesellschaft
9490 Vaduz
+423 399 24 00
hoval.com

United Kingdom
Hoval Ltd.
Newark Notts. NG 24 1JN
+44 1636 672 711
hoval.co.uk

2026 - 10 | Subject to modifications

Your Hoval partner