Hoval

CATALOGUE

Hoval UltraGas® 2 D

Floor-standing gas condensing boiler UltraGas® 2 D (250-3100)



Hoval | Responsibility for energy and environment

Table of contents

- Description 5
- Part numbers 7
- Technical data 17
- Dimensions 23
- Engineering 28

Hoval UltraGas® 2 D (250-3100)

Gas boiler
- Double boiler made of steel with condensing technology consisting of 2 individual boilers of 125, 150, 190, 230, 300, 350, 400, 450, 500, 620, 700, 800, 1000, 1100, 1300 or 1550 kW
- For the combustion of:
  - natural gas E
  - natural gas E with a hydrogen content (H_2) of up to 20 % by vol.
  - propane according to DIN 51622
  - biomethane according to EN 16723
- Combustion chamber made of stainless steel
- Maximum flue gas condensation by secondary heating surfaces made of **TurboFer®** hybrid stainless steel composite pipes; heating gas side: stainless steel/aluminium water side: stainless steel
- Thermal insulation with mineral wool mat
- Water pressure sensor:
  - Fulfils the function of a minimum and maximum pressure limiter
  - Replacement for the low water level protection
- Flue gas temperature sensor with flue gas limiter function
- Pre-mix burner
  - with fan and venturi
  - modulating operation
  - automatic ignition
  - ionisation guard
  - gas pressure monitor
- Gas boiler fully clad with steel plates, red powder-coated
- Flue gas overpressure set consisting of motorised air intake suction flap (connection for direct combustion air supply without accessories possible) and flue gas collector.
- Heating connections backwards incl. counter flange, screws and seals for:
  - heating flow
  - high temperature return
  - low temperature return
- *UltraGas® 2 D (600-3100):* with integrated gas pipe compensator
- Each individual boiler has a Hoval TopTronic® E control built in
- Possibility of connecting an external gas solenoid valve with error output



Model range

UltraGas® 2 type	Nominal heat output at 50/30 °C kW
D (250)	25-252
D (300)	35-302
D (380)	38-382
D (460)	51-466
D (600)	58-598
D (700)	70-704
D (800)	69-798
D (900)	77-902
D (1000)	77-982
D (1240)	136-1244
D (1400)	146-1406
D (1600)	166-1608
D (2000)	205-1998
D (2200)	229-2224
D (2600)	269-2640
D (3100)	324-3100
DH (1400)	146-1406
DH (2200)	229-2224
DH (3100)	324-3100

TopTronic® E controller

Control panel
- Colour touchscreen 4.3 inch
- Heat generator blocking switch for interrupting operation
- Fault signalling lamp

TopTronic® E control module
- Simple, intuitive operating concept
- Display of the most important operating statuses
- Configurable start screen
- Operating mode selection
- Configurable day and week programmes
- Operation of all connected Hoval CAN bus modules
- Commissioning wizard
- Service and maintenance function
- Fault message management
- Analysis function
- Weather display (with HovalConnect option)
- Adaptation of the heating strategy based on the weather forecast (with HovalConnect option)

TopTronic® E basic module heat generator TTE-WEZ
- Control functions integrated for
  - 1 heating circuit with mixer
  - 1 heating circuit without mixer
  - 1 hot water charging circuit
  - bivalent and cascade management
- Outdoor sensor
- Immersion sensor (calorifier sensor)
- Contact sensor (flow temperature sensor)
- RAST 5 basic plug set

Options for TopTronic® E controller
- Can be expanded by max. 1 module expansion:
  - module expansion heating circuit or
  - module expansion heat balancing or
  - module expansion Universal
- Can be networked with a total of up to 16 controller modules:
  - heating circuit/hot water module
  - solar module
  - buffer module
  - measuring module

Number of modules that can be additionally installed in the heat generator (per single boiler):

UltraGas® 2 (125-230)
- 1 module expansion and 1 controller module **or**
- 2 controller modules

UltraGas® 2 (300-500):
- 3 controller modules/module expansions

UltraGas® 2 (620-1550):
- 4 controller modules/module expansions

Notice
Max. 1 module expansion can be connected to the basic module heat generator TTE-WEZ!

The supplementary plug set must be ordered in order to use expanded controller functions.

Further information about the TopTronic® E
see “Controls”

Optional
- Free-standing calorifier see “Calorifiers”
- Additional control for more heating circuits
- Hydraulic connection

Delivery
- 2 gas boilers, cladding with thermal insulation, 2 TopTronic® E controls, flue gas collector and combustion air connection delivered separately packed

On site
- Mounting of cladding, thermal insulations and boiler controller
- Mounting of boiler feet
- Mounting of the flue gas connection line and flue gas overpressure set (two motorised combustion air dampers and a flue gas collector)
- Bus cable for connecting the two boiler controllers of the double boiler on site (not included in scope of delivery)

Notice
For the version with common flue gas line with overpressure, the flue gas excess pressure set must be imperatively mounted.

Floor-standing gas condensing boiler



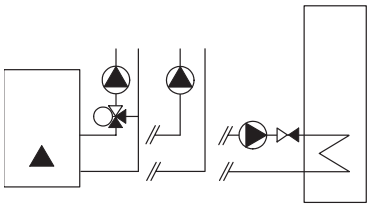

Boiler permissions

CE product ID No.: UltraGas® 2 D (250-3100)	CE-0085DL0175
SVWG No.	20-010-4

Hoval UltraGas® 2 D (250-3100)

Double boiler consisting of two individual boilers (UltraGas® 2 125-1550 kW), each with a built-in Hoval TopTronic® E control

Control functions integrated for
- 1 heating circuit with mixer
- 1 heating circuit without mixer
- 1 hot water charging circuit
- bivalent and cascade management

- Can be optionally expanded by max. 1 module expansion:
  - module expansion heating circuit or
  - module expansion heat balancing or
  - module expansion Universal
- Can be optionally networked with a total of up to 16 controller modules (incl. solar module)

Gas boiler made of steel with TopTronic® E control, combustion chamber made of stainless steel.
Secondary heating surfaces made of **TurboFer®** stainless steel composite pipes. Pre-mix burner with fan.

Delivery
2 gas boilers, cladding and thermal insulation
2 TopTronic® E controls, flue gas collector and combustion air connection supplied separately packaged

UltraGas® 2 type	Nominal heat output at 50/30 °C kW	Operating pressure bar	Part No.
D (250)	25-252	6	7018 907
D (300)	35-302	6	7018 908
D (380)	38-382	6	7018 933
D (460)	51-466	6	7018 934
D (600)	58-598	6	7018 812
D (700)	70-704	6	7018 813
D (800)	69-798	6	7018 814
D (900)	77-902	6	7019 143
D (1000)	77-982	6	7018 815
D (1240)	136-1244	6	7018 880
D (1400)	146-1406	6	7018 881
D (1600)	166-1608	6	7018 857
D (2000)	205-1998	6	7018 858
D (2200)	229-2224	6	7018 859
D (2600)	269-2640	6	7018 903
D (3100)	324-3100	6	7018 904

[1] kW = modulation range

Floor-standing gas condensing boiler (multi-part installation)

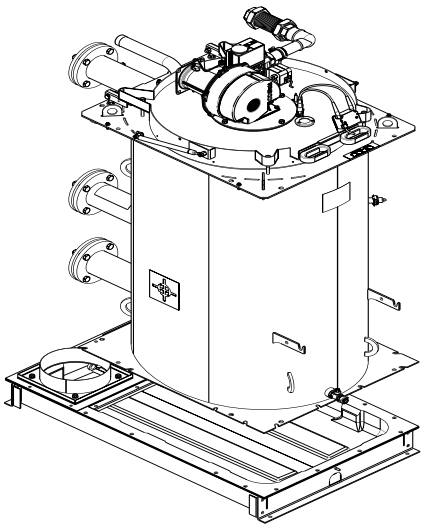

Hoval UltraGas® 2 D (250D-3100D) (multi-part installation)

Double boiler consisting of two individual boilers (UltraGas® 125-1550 kW), each with a built-in Hoval TopTronic® E control for **multi-part installation**. Assembled on-site by the installer.

UltraGas® 2 type	Output at 50/30 °C kW	Operating pressure bar	Part No.
D (250)	25-252	6	7018 905
D (300)	35-302	6	7018 906
D (380)	38-382	6	7018 931
D (460)	51-466	6	7018 932
D (600)	58-598	6	7018 850
D (700)	70-704	6	7018 851
D (800)	69-798	6	7018 852
D (900)	77-902	6	7019 142
D (1000)	77-982	6	7018 853
D (1240)	136-1244	6	7018 867
D (1400)	146-1406	6	7018 868
D (1600)	166-1608	6	7018 860
D (2000)	205-1998	6	7018 861
D (2200)	229-2224	6	7018 862
D (2600)	269-2640	6	7018 901
D (3100)	324-3100	6	7018 902

[1] kW = modulation range

Floor-standing gas condensing boiler (high-pressure design)

Delivery time approx. 8 weeks

Hoval UltraGas® 2 DH (1400-3100) (high-pressure design)

Floor-standing gas condensing boiler in **high-pressure design** (operating pressure 10 bar)

UltraGas® 2 type	Output at 50/30 °C kW [1)]	Operating pressure bar	Part No.
DH (1400)	146-1406	10	7019 105
DH (2200)	229-2224	10	7018 831
DH (3100)	324-3100	10	7018 832

[1] kW = modulation range

	Part No.
Labels for conversion to propane for UltraGas® 2 D (250-700)	6064 556
Labels for conversion to propane for UltraGas® 2 D (800-1600)	6064 557
Labels for conversion to propane for UltraGas® 2 D (2000-3100)	6064 577
System flow sensor for UltraGas® 2 for installation in the flow connector sleeve Rp ¼", for regulating the flow temperature. Consisting of temperature sensor and connection cable	6053 398



Installation of the system flow sensor is recommended for optimal control of the flow temperature.

TopTronic® E module expansions

for TopTronic® E basic module heat generator

		Part No.
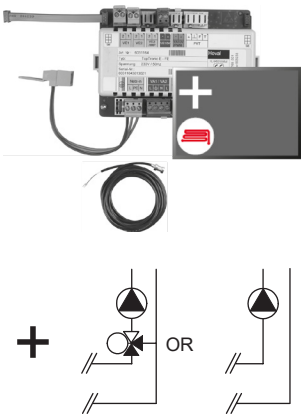	**TopTronic® E module expansion heating circuit TTE-FE HK** Expansion to the inputs and outputs of the basic module heat generator or the heating circuit/domestic hot water module for implementing the following functions: - 1 heating/cooling circuit without mixer or - 1 heating/cooling circuit with mixer Consisting of: - Fitting accessories - 1 contact sensor ALF/2P/4/T, L = 4.0 m - Basic plug set FE module **Notice** The supplementary plug set may have to be ordered to implement functions differing from the standard!	6034 576
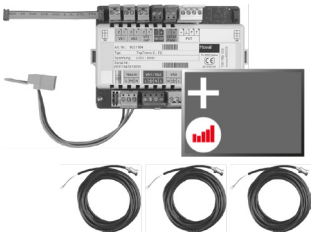	**TopTronic® E module expansion heating circuit incl. energy balancing TTE-FE HK-EBZ** Expansion to the inputs and outputs of the basic module heat generator or the heating circuit/domestic hot water module for implementing the following functions: - 1 heating/cooling circuit without mixer or - 1 heating/cooling circuit with mixer incl. energy balancing in each case Consisting of: - Fitting accessories - 3 contact sensors ALF/2P/4/T, L = 4.0 m - Plug set FE module **Notice** Suitable flow rate sensors (pulse sensors) must be provided on site.	6037 062
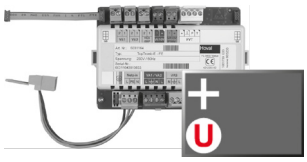	**TopTronic® E module expansion Universal TTE-FE UNI** Expansion to the inputs and outputs of a controller module (basic module heat generator, heating circuit/domestic hot water module, solar module, buffer module) for implementing various functions Consisting of: - Fitting accessories - Plug set FE module **Further information** see “Controls” – “Hoval TopTronic® E module expansions” chapter **Notice** Refer to the Hoval System Technology to find which functions and hydraulic arrangements can be implemented.	6034 575

Accessories for TopTronic® E

		Part No.
	**TopTronic® E controller modules**	
	TTE-HK/WW TopTronic® E heating circuit/ hot water module	6034 571
	TTE-SOL TopTronic® E solar module	6037 058
	TTE-PS TopTronic® E buffer module	6037 057
	TTE-MWA TopTronic® E measuring module	6034 574
 	**Supplementary plug set**	
	for basic module heat generator TTE-WEZ	6034 499
	for controller modules and module expansion TTE-FE HK	6034 503
	**TopTronic® E room control modules**	
	TTE-RBM TopTronic® E room control modules	
	easy white	6037 071
	comfort white	6037 069
	comfort black	6037 070
	**Enhanced language package TopTronic® E** one SD card required per control module Consisting of the following languages: HU, CS, SL, RO, PL, TR, ES, HR, SR, JA, DA, NL	6039 253
	**HovalConnect**	
	HovalConnect LAN	6049 496
	HovalConnect WLAN	6049 498
	HovalConnect Modbus	6049 501
	HovalConnect KNX	6049 593
	TopTronic® E interface modules	
	GLT module 0-10 V	6034 578
	**TopTronic® E sensors**	
	AF/2P/K Outdoor sensor H x W x D = 80 x 50 x 28 mm	2055 889
	TF/2P/5/6T Immersion sensor, L = 5.0 m	2055 888
	ALF/2P/4/T Contact sensor, L = 4.0 m	2056 775
	TF/1.1P/2.5S/6T Collector sensor, L = 2.5 m	2056 776
	**System module SB-SM-BZ1** for passing on a volt-free operating and fault message. (for 1-stage/modulating H-Gens)	6048 055
	**Bivalent switch**	
	for various release or switching functions	
	Bivalent switch 1-piece	2056 858
	Bivalent switch 2-piece	2061 826
	**System casing**	
	System casing 182 mm	6038 551
	System casing 254 mm	6038 552
	**TopTronic® E wall casing**	
	WG-190 Wall casing small	6052 983
	WG-360 Wall casing medium	6052 984
	WG-360 BM Wall casing medium with control module cut-out	6052 985
	WG-510 Wall casing large	6052 986
	WG-510 BM Wall casing large with control module cut-out	6052 987

Further information
see “Controls”

Accessories

	Part No.
 **Flow temperature monitor** for panel heating (1 controller per heating circuit) 15 ... 95 °C, setting (visible externally) under the casing cover	
Clamp-on flow temperature monitor RAK-TW1000S with retaining strap, without cable and plug	242 902
Clamp-on flow temperature monitor set RAK-TW1000S with retaining strap, supplied with cable (4 m) and plug	6033 745
Immersion thermostat RAK-TW1000S Thermostat with immersion sleeve ½″ Depth of immersion 150 mm, nickel-plated brass	6010 082
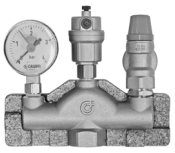 **Safety set DN 25** complete with safety valve DN 25 (3 bar), up to 200 kW Pressure gauge and automatic aspirator with barrier Connection: 1″ internal thread	6018 709
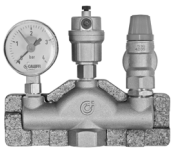 **Safety set DN 32** complete with safety valve DN 32 (3 bar), up to 350 kW Pressure gauge and automatic aspirator with barrier Connection 1¼″ internal thread	6018 710

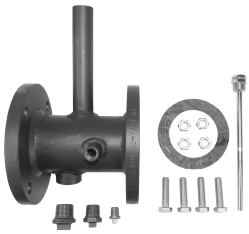

Fitting pipe flow

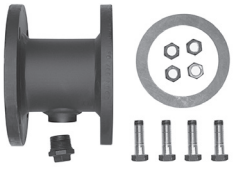

Fitting pipe return

Safety fitting pipe for flow and return
Suitable for max. 6 bar, with screws and nuts
- for installation on the flow or high and low-temperature return of the Hoval UltraGas® 2 boiler
- for installation of an additional safety temperature limiter, a maximum pressure limiter
- for connection of a diaphragm pressure expansion tank on the return

Dimension	Suitable to UltraGas® 2 D	Connection	Part No.
DN 65 [1]	(250-460)	flow	6053 408
DN 65 [1]	(250-460)	return	6023 108
DN 100 [1]	(600-1400)	flow	6053 409
DN 100 [1]	(600-1400)	return	6023 110
DN 125 [1]	(1600-2200)	flow	6055 078
DN 125 [1]	(1600-2200)	return	6023 112
DN 150 [1]	(2600,3100)	flow	6055 079
DN 150 [1]	(2600,3100)	return	6051 680

[1] 2 pieces are necessary

Further information see “Dimensions” Hoval UltraGas® 2 (125-1550)

Accessories

	Part No.
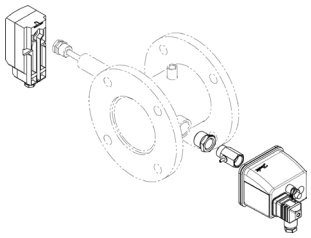 **Safety armature set** Compatible with fitting pipe for meeting safety requirements of EN 12828: > 300 kW or SWKI HE301-01: 70-1000 kW related to single boiler Consisting of: - adjustable maximum pressure limiter incl. ball valve - safety temperature limiter (RAK-ST.131)	6051 903
2 pieces per double boiler necessary	
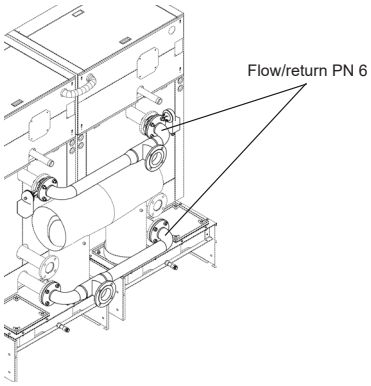 **Hydraulic connection set for double boiler flow/return PN 6** Pipe connection set for double boiler incl. hydraulic butterfly valves For 230 V, pre-wired Operating method: continuously controlling (2-10 V)	
Type	
zu UltraGas® 2 D (250-460)	6054 637
zu UltraGas® 2 D (600-1000)	6065 582
zu UltraGas® 2 D (1240,1400)	6065 603
zu UltraGas® 2 D (1600-2200)	6065 604
zu UltraGas® 2 D (2600,3100)	6065 605
 **Hydraulic butterfly valve** for direct installation on the flow and/or return of the boiler pre-wired Operating method: continuously controlling (2-10 V) As an option if no flow/return set is ordered.	
Type	
UltraGas® 2 (125-230) DN 65 / 24 V	6050 605
UltraGas® 2 (300-700) DN 100 / 24 V	6065 606
UltraGas® 2 (800-1100) DN 125 / 230 V	6065 607
UltraGas® 2 (1300,1550) DN 150 / 230 V	6065 608
2 pieces needed per double boiler	
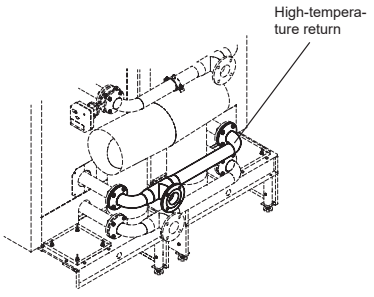 **Hydraulic connection double boiler high-temperature return PN 6 for UltraGas® 2 D** for UltraGas® 2 D (e.g. for return calorifier charging)	
Type	
UltraGas® 2 D (250-460)	6054 636
UltraGas® 2 D (600-1000)	6054 396
UltraGas® 2 D (1240,1400)	6004 924
UltraGas® 2 D (1600-2200)	6009 534
UltraGas® 2 D (2600,3100)	6051 915

Accessories

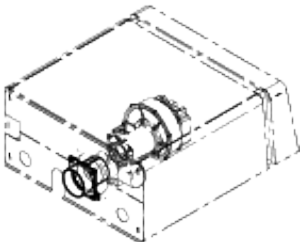

Connection for direct combustion air supply
Only in combination with a motorised combustion air damper (ordered separately).
Can also be used for creating a boiler cascade with a common flue gas line.

Type	Part No.
UltraGas® 2 (125,150)	6052 847
UltraGas® 2 (190,230)	6052 848
UltraGas® 2 (300-500)	6053 097
UltraGas® 2 (620,700)	6053 780
UltraGas® 2 (800-1100)	6053 782
UltraGas® 2 (1300,1550)	6052 849

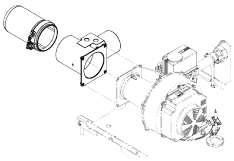

Connection protection filter — 6052 151
for UltraGas® 2 (125-500)
for installation on
the motorised combustion air damper
for filtering the combustion air
in the building phase
Pore width of the filter < 50 µm

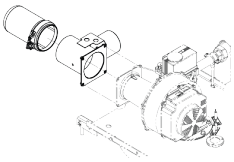

Connection protection filter — 6052 152
for UltraGas® 2 (620-1550)
for installation on
the motorised combustion air damper
for filtering the combustion air
in the building phase
Pore width of the filter < 50 µm



Gas valve
with thermally releasing cut-off device.

Type	Connection inches	Part No.
DN 25	R 1″	2069 324
DN 32	R 1¼″	2069 325
DN 40	R 1½″	2069 326
DN 50	R 2″	2069 327

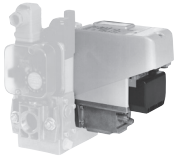

Valve testing system
for UltraGas® 2 (125-1550),
UltraGas® 2 (250D-3100D)
Automatic, compact testing system for testing the leakage of the gas valve before each burner start with ready-to-connect wiring.
Suitable for all gas qualities for which the UltraGas® 2 is permitted.

Type	Part No.
UltraGas® 2 D (250D-700D)	6039 964
UltraGas® 2 D (800D-1400D)	6039 965
UltraGas® 2 D (1600D-3100D)	6054 484

For an UltraGas® 2 double boiler, two valve test systems must be ordered.

Accessories

For a kit, the gas ball valve, fitting protection and mounting set must each be ordered separately in the same dimension.



Gas valve kit
Set with gas valve and thermally releasing shut-off device
Thermal closing at approx. 95 °C
Tripping time < 60 s
Maximum working pressure 5 bar
Ambient temperature < 60 °C
Combustible gases according to G260

Gas ball valve with flange

Type	Part No.
DN 65	2007 988
DN 80	2007 989
DN 100	2007 990



Fitting protection TAS

Type	Part No.
TAS 23-65	2069 328
TAS 23-80	2069 329
TAS 23-100	2069 330

Mounting set for assembly
Gas ball valve with fitting protection

Type	Part No.
MS-TAS 23-65	6041 745
MS-TAS 23-80	6041 746
MS-TAS 23-100	6041 747



Gas filter
with measurement nozzle before and behind the filter inset (diameter: 9 mm)
Pore width of the filter inset < 50 µm
Max. pressure difference 10 mbar
Inlet pressure:
UltraGas® 2 (125-700): max. 80 mbar
UltraGas® 2 (800-1550): max 300 mbar

Type	Connection	Part No.
70602/6B	Rp 1″	2007 996
70604/6B	Rp 1¼″	2054 495
70603/6B	Rp 1½″	2007 997
70631/6B	Rp 2″	2007 998
70610F/6B	DN 65	2007 999



Gas pipe compensator 1″ — 6034 556
for UltraGas® 2 (125,150),
UltraGas® 2 D (250,300)
for compensating for connection tolerances in the gas pipe



Gas pipe compensator 1½″ — 6034 557
for UltraGas® 2 (190,230),
UltraGas® 2 D (380,460)
for compensating for connection tolerances in the gas pipe

2 pieces per double boiler necessary

Condensate drainage to UltraGas® 2 D

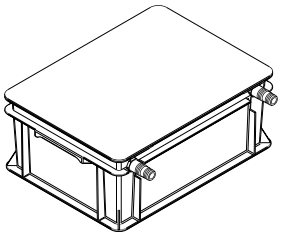

Neutralisation box
Condensate drain into a lower drainage duct
Connection hose: 2 m
Service life up to 1 year, depending on the boiler operating mode
Positioning behind the boiler or laterally
One neutralisation box per boiler

Type		Neutralisation granulate	Part No.
UltraGas® 2 (125-400)	HNB-0400	3 kg	6054 792
UltraGas® 2 (450-800)	HNB-0800	6 kg	6054 793
UltraGas® 2 (1000,1100)	HNB-1200	9 kg	6054 794
UltraGas® 2 (1300,1550)	HNB-1600	12 kg	6054 795



Condensate pump — 6063 855
For transporting condensate
into a higher drainage duct
Including connection lines
Completely wired, cable and plug
For connection to the boiler controller
Delivery head: max. 5 m
Can be combined with neutralisation box



Condensate pump — 6063 856
for UltraGas® 2 (1000-1550)
For transporting the condensate
into a higher drainage duct
Including connection line
Completely wired, cable and plug
For connection to the boiler controller
Delivery head: 4 m
Can be combined with neutralisation box

2 pieces needed per double boiler



Neutralisation granulate — 2028 906
for neutralisation box
Refill set volume 3 kg
Life time of one filling:
approx. 1 year, depending on amount of condensate

Services



Services and associated scope of services
see separate catalogue “Hoval Services”

Commissioning by Hoval customer service is a prerequisite for warranty/guarantee activation.

Part No.

Hoval UltraGas® 2 D (250-460)

Type			D (250)	D (300)	D (380)	D (460)
• Nominal heat output at 80/60 °C, natural gas [1]		kW	21-228	33-278	35-354	47-436
• Nominal heat output at 50/30 °C, natural gas [1]		kW	25-252	35-302	38-382	51-466
• Nominal heat output at 80/60 °C, propane [2]		kW	32-226	43-276	52-351	66-434
• Nominal heat output at 50/30 °C, propane [2]		kW	35-252	48-302	59-382	73-466
• Nominal heat input with natural gas [3]		kW	23-232	32-284	35-358	47-446
• Nominal heat input with propane [2]		kW	33-232	44-284	54-358	68-446
• Operating pressure heating min./max. (PMS)		bar	1/6	1/6	1/6	1/6
• Operating temperature max. (T_{max})		°C	95	95	95	95
• Boiler water content ($V_{(H20)}$)		l	2 x 207	2 x 195	2 x 276	2 x 265
• Flow resistance boiler			see diagram			
• Minimum circulation water quantity		l/h	-	-	-	-
• Boiler weight (without water capacity, incl. cladding)		kg	2 x 390	2 x 400	2 x 485	2 x 505
• Boiler efficiency at 80/60 °C in full-load operation (NCV/GCV) [4]		%	98.6/88.9	97.6/88.1	98.5/88.7	98.2/88.5
• Boiler efficiency at 30 % partial load (NCV/GCV) [4]		%	108.7/98.1	108.7/98.1	109.0/98.2	108.4/97.8
• Room heating energy efficiency						
- without control	ηs	%	93	93	93	93
- with control	ηs	%	95	95	95	95
- with control and room sensor	ηs	%	97	97	97	97
- annual energy consumption	Q_{HE}	GJ	386	479	598	751
• NOx class (EN 15502)			-	-	-	6
• Nitrogen oxide emissions (EN 15502) (GCV)	NOx	mg/kWh	25	28	33	37
• Carbon monoxide emissions at 50/30 °C (related to 3 % of O_2)	CO	mg/Nm^3	31	21	25	13
• O_2 content in flue gas min./max. output		%	5.9/5.6	5.5/6.0	5.9/6.0	6.0/5.9
• Heat loss in standby mode (EN 15502) (50°C)		Watt	520	520	640	640
• Dimensions			see dimensional drawing			
• Gas flow pressure min./max.						
- Natural gas E/LL		mbar	17.4-80	17.4-80	17.4-80	17.4-80
- Propane		mbar	37-57	37-57	37-57	37-57
• Gas inlet pressure max. (idle pressure)		mbar	80	80	80	80
• Gas connection values at 15 °C/1013 mbar:						
- Natural gas E – (Wo = 15.0 kWh/m^3) NCV = 9.7 kWh/m^3		m^3/h	2.4-23.9	3.3-29.3	3.6-36.9	4.8-46.0
- Natural gas LL (G25) – (Wo = 12.4 kWh/m^3) NCV = 8.13 kWh/m^3		m^3/h	2.8-28.5	3.9-34.9	4.3-44.0	5.8-54.9
- Propane (G31) NCV = 24.4 kWh/m^3 [2]		m^3/h	1.4-9.5	1.8-11.6	2.2-14.7	2.8-18.3
• Operating voltage (50/60 Hz)		V	1 x 230	1 x 230	1 x 230	1 x 230
• Electrical power consumption min./max.		Watt	41/280	43/450	38/302	49/456
• Standby		Watt	7	8	8	8
• Type of protection		IP	20	20	20	20
• Permitted ambient temperature during operation		°C	5-40	5-40	5-40	5-40
• Sound power level						
- Heating noise (EN 15036 part 1) (room air dependent)		dB(A)	76	81	67	70
- Flue gas noise radiated from the mouth (DIN 45635 part 47) (room air dependent/independent of room air)		dB(A)	-	-	-	-
• Condensate quantity (natural gas) at 50/30 °C		l/h	22	24	30	40
• pH value of the condensate (approx.)		pH	4.2	4.2	4.2	4.2
• Construction			B23, B23P, C53, C63			
• Flue gas system						
- Temperature class			T120	T120	T120	T120
- Flue gas mass flow at max. nominal heat input (dry)		kg/h	376	452	566	688
- Flue gas mass flow at min. nominal heat input (dry)		kg/h	37	51	55	63
- Flue gas temperature at max. nominal heat output and 80/60 °C		°C	64	65	68	69
- Flue gas temperature at max. nominal heat output and 50/30 °C		°C	43	45	46	47
- Flue gas temperature at min. nominal heat output and 50/30 °C		°C	29	28	29	29
- Max. permissible temperature of the combustion air		°C	48	48	48	48
- Combustion air flow rate		Nm^3/h	308	360	464	560
- Maximum supply pressure for combustion air supply and flue gas line		Pa	60	60	60	60
- Maximum draught/underpressure at flue gas outlet		Pa	−30	−30	−30	−30

[1] In relation to natural gas G20 (100 % methane). With a hydrogen content (H_2) of up to 20 % by vol. in accordance with DVGW ZP3100 (D), an output reduction of up to 7 % is possible.

[2] Data related to NCV, conditional data

[3] Data related to NCV. The boiler series is tested for EE/H setting. With a factory setting to a Wobbe value of 15.0 kWh/m^3, operation in the Wobbe value range from 12.0 to 15.7 kWh/m^3 is possible without resetting.

[4] Conversion acc. to EN 15502-1, Appendix J

Hoval UltraGas® 2 D (600-900)

Type			D (600)	D (700)	D (800)	D (900)
• Nominal heat output at 80/60 °C, natural gas [1]		kW	54-548	67-630	62-724	73-830
• Nominal heat output at 50/30 °C, natural gas [1]		kW	58-598	70-704	69-798	77-902
• Nominal heat output at 80/60 °C, propane [2]		kW	83-548	94-622	109-722	124-816
• Nominal heat output at 50/30 °C, propane [2]		kW	93-598	109-704	123-798	138-902
• Nominal heat input with natural gas [3]		kW	54-564	64-662	62-748	71-854
• Nominal heat input with propane [2]		kW	87-564	102-662	114-748	130-854
• Operating pressure heating min./max. (PMS)		bar	1/6	1/6	1/6	1/6
• Operating temperature max. (T_{max})		°C	95	95	95	95
• Boiler water content ($V_{(H20)}$)		l	2 x 472	2 x 452	2 x 432	2 x 412
• Flow resistance boiler			see diagram			
• Minimum circulation water quantity		l/h	-	-	-	-
• Boiler weight (without water capacity, incl. cladding)		kg	2 x 730	2 x 765	2 x 800	2 x 830
• Boiler efficiency at 80/60 °C in full-load operation (NCV/GCV) [4]		%	98.2/88.5	98.2/88.5	98.2/88.5	98.2/88.5
• Boiler efficiency at 30 % partial load (NCV/GCV) [4]		%	109.2/98.4	108.9/98.1	109.0/98.2	108.9/98.1
• Room heating energy efficiency						
- without control	ηs	%	94	93	93	-
- with control	ηs	%	96	95	95	-
- with control and room sensor	ηs	%	98	97	97	-
- annual energy consumption	Q_{HE}	GJ	926	1076	1212	-
• NOx class (EN 15502)			6	6	6	6
• Nitrogen oxide emissions (EN 15502) (GCV)	NOx	mg/kWh	39	45	39	45
• Carbon monoxide emissions at 50/30 °C (related to 3 % of O_2)	CO	mg/Nm^3	18	26	23	30
• O_2 content in flue gas min./max. output		%	5.5/5.8	5.7/5.7	5.9/5.9	6.0/5.6
• Heat loss in standby mode (EN 15502) (50°C)		Watt	860	860	860	860
• Dimensions			see dimensional drawing			
• Gas flow pressure min./max.						
- Natural gas E/LL		mbar	17.4-80	17.4-80	17.4-80	17.4-80
- Propane		mbar	37-57	37-57	37-57	37-57
• Gas inlet pressure max. (idle pressure)		mbar	80	80	80	80
• Gas connection values at 15 °C/1013 mbar:						
- Natural gas E – (Wo = 15.0 kWh/m^3) NCV = 9.7 kWh/m^3		m^3/h	5.6-58.1	6.6-68.2	6.4-77.1	7.3-88.0
- Natural gas LL (G25) – (Wo = 12.4 kWh/m^3) NCV = 8.13 kWh/m^3		m^3/h	6.6-69.4	7.9-81.4	7.6-92.0	8.7-105.0
- Propane (G31) NCV = 24.4 kWh/m^3 [2]		m^3/h	3.6-23.1	4.2-27.1	4.7-30.7	5.3-35.0
• Operating voltage (50/60 Hz)		V	1 x 230	1 x 230	1 x 230	1 x 230
• Electrical power consumption min./max.		Watt	51/730	55/700	56/1036	56/1180
• Standby		Watt	5	5	5	5
• Type of protection		IP	20	20	20	20
• Permitted ambient temperature during operation		°C	5-40	5-40	5-40	5-40
• Sound power level						
- Heating noise (EN 15036 part 1) (room air dependent)		dB(A)	76	73	76	77
- Flue gas noise radiated from the mouth (DIN 45635 part 47) (room air dependent/independent of room air)		dB(A)	-	-	-	-
• Condensate quantity (natural gas) at 50/30 °C		l/h	44	50	56	58
• pH value of the condensate (approx.)		pH	4.2	4.2	4.2	4.2
• Construction			B23, B23P, C53, C63			
• Flue gas system						
- Temperature class			T120	T120	T120	T120
- Flue gas mass flow at max. nominal heat input (dry)		kg/h	890	1044	1182	1348
- Flue gas mass flow at min. nominal heat input (dry)		kg/h	85	101	98	112
- Flue gas temperature at max. nominal heat output and 80/60 °C		°C	64	65	66	67
- Flue gas temperature at max. nominal heat output and 50/30 °C		°C	43	44	48	47
- Flue gas temperature at min. nominal heat output and 50/30 °C		°C	29	29	29	29
- Max. permissible temperature of the combustion air		°C	48	48	48	48
- Combustion air flow rate		Nm^3/h	728	856	966	1104
- Maximum supply pressure for combustion air supply and flue gas line		Pa	60	60	60	60
- Maximum draught/underpressure at flue gas outlet		Pa	−30	−30	−30	−30

[1] In relation to natural gas G20 (100 % methane). With a hydrogen content (H_2) of up to 20 % by vol. in accordance with DVGW ZP3100 (D), an output reduction of up to 7 % is possible.

[2] Data related to NCV, conditional data

[3] Data related to NCV. The boiler series is tested for EE/H setting. With a factory setting to a Wobbe value of 15.0 kWh/m^3, operation in the Wobbe value range from 12.0 to 15.7 kWh/m3 is possible without resetting.

[4] Conversion acc. to EN 15502-1, Appendix J

Hoval UltraGas® 2 D (1000-1600)

Type			D (1000)	D (1240)	D (1400)	D (1600)
• Nominal heat output at 80/60 °C, natural gas [1]		kW	71-898	125-1160	132-1306	150-1486
• Nominal heat output at 50/30 °C, natural gas [1]		kW	77-982	136-1244	146-1406	166-1608
• Nominal heat output at 80/60 °C, propane [2]		kW	133-882	173-1139	193-1286	233-1488
• Nominal heat output at 50/30 °C, propane [2]		kW	147-982	184-1244	208-1406	254-1610
• Nominal heat input with natural gas [3]		kW	71-926	124-1182	134-1336	151-1518
• Nominal heat input with propane [2]		kW	140-926	179-1182	201-1336	236-1518
• Operating pressure heating min./max. (PMS)		bar	1/6	1/6	1/6	1/6
• Operating temperature max. (T_{max})		°C	95	95	95	95
• Boiler water content ($V_{(H20)}$)		l	2 x 408	2 x 536	2 x 509	2 x 831
• Flow resistance boiler			see diagram			
• Minimum circulation water quantity		l/h	-	-	-	-
• Boiler weight (without water capacity, incl. cladding)		kg	2 x 855	2 x 1090	2 x 1135	2 x 1435
• Boiler efficiency at 80/60 °C in full-load operation (NCV/GCV) [4]		%	98.2/88.5	98.2/88.5	98.2/88.5	98.3/88.6
• Boiler efficiency at 30 % partial load (NCV/GCV) [4]		%	109.0/98.2	109.0/98.2	108.9/98.1	109.1/98.3
• Room heating energy efficiency						
- without control	ηs	%	-	-	-	-
- with control	ηs	%	-	-	-	-
- with control and room sensor	ηs	%	-	-	-	-
- annual energy consumption	Q_{HE}	GJ	-	-	-	-
• NOx class (EN 15502)			6	6	6	6
• Nitrogen oxide emissions (EN 15502) (GCV)	NOx	mg/kWh	50	33	40	36
• Carbon monoxide emissions at 50/30 °C (related to 3 % of O_2)	CO	mg/Nm³	46	24	26	23
• O_2 content in flue gas min./max. output		%	5.5/5.8	5.9/6.0	6.0/5.7	6.0/5.8
• Heat loss in standby mode (EN 15502) (50°C)		Watt	860	1080	1080	1200
• Dimensions			see dimensional drawing			
• Gas flow pressure min./max.						
- Natural gas E/LL		mbar	17.4-80	17.4-80	17.4-80	17.4-300
- Propane		mbar	37-57	37-57	37-57	37-57
• Gas inlet pressure max. (idle pressure)		mbar	80	80	80	300
• Gas connection values at 15 °C/1013 mbar:						
- Natural gas E – (Wo = 15.0 kWh/m³) NCV = 9.7 kWh/m³		m³/h	7.3-95.5	12.8-121.9	13.8-137.7	15.6-156.5
- Natural gas LL (G25) – (Wo = 12.4 kWh/m³) NCV = 8.13 kWh/m³		m³/h	8.7-113.9	15.3-145.4	16.5-164.3	18.6-186.7
- Propane (G31) NCV = 24.4 kWh/m³ [2]		m³/h	5.7-38.0	7.3-48.4	8.2-54.8	9.7-62.2
• Operating voltage (50/60 Hz)		V	1 x 230	1 x 230	1 x 230	1 x 230
• Electrical power consumption min./max.		Watt	57/1432	63/1662	67/2120	94/2024
• Standby		Watt	5	5	5	7
• Type of protection		IP	20	20	20	20
• Permitted ambient temperature during operation		°C	5-40	5-40	5-40	5-40
• Sound power level						
- Heating noise (EN 15036 part 1) (room air dependent)		dB(A)	81	78	79	81
- Flue gas noise radiated from the mouth (DIN 45635 part 47) (room air dependent/independent of room air)		dB(A)	-	72	71	-
• Condensate quantity (natural gas) at 50/30 °C		l/h	74	102	96	114
• pH value of the condensate (approx.)		pH	4.2	4.2	4.2	4.2
• Construction			B23, B23P, C53, C63			
• Flue gas system						
- Temperature class			T120	T120	T120	T120
- Flue gas mass flow at max. nominal heat input (dry)		kg/h	1472	1866	2110	2396
- Flue gas mass flow at min. nominal heat input (dry)		kg/h	112	196	211	238
- Flue gas temperature at max. nominal heat output and 80/60 °C		°C	66	68	69	66
- Flue gas temperature at max. nominal heat output and 50/30 °C		°C	44	47	49	44
- Flue gas temperature at min. nominal heat output and 50/30 °C		°C	28	28	29	28
- Max. permissible temperature of the combustion air		°C	48	48	48	48
- Combustion air flow rate		Nm³/h	1204	1528	1726	1962
- Maximum supply pressure for combustion air supply and flue gas line		Pa	60	60	60	60
- Maximum draught/underpressure at flue gas outlet		Pa	−30	−30	−30	−30

[1] In relation to natural gas G20 (100 % methane). With a hydrogen content (H_2) of up to 20 % by vol. in accordance with DVGW ZP3100 (D), an output reduction of up to 7 % is possible.

[2] Data related to NCV, conditional data

[3] Data related to NCV. The boiler series is tested for EE/H setting. With a factory setting to a Wobbe value of 15.0 kWh/m³, operation in the Wobbe value range from 12.0 to 15.7 kWh/m3 is possible without resetting.

[4] Conversion acc. to EN 15502-1, Appendix J

Hoval UltraGas® 2 D (2000-3100)

Type			D (2000)	D (2200)	D (3100)	D (3100)
• Nominal heat output at 80/60 °C, natural gas [1]		kW	185-1852	203-2076	241-2460	297-2894
• Nominal heat output at 50/30 °C, natural gas [1]		kW	205-1998	229-2224	269-2640	324-3100
• Nominal heat output at 80/60 °C, propane [2]		kW	262-1852	299-2067	362-2455	427-2877
• Nominal heat output at 50/30 °C, propane [2]		kW	282-1998	316-2224	385-2640	453-3100
• Nominal heat input with natural gas [3]		kW	187-1886	206-2114	247-2502	297-2938
• Nominal heat input with propane [2]		kW	265-1886	306-2114	371-2502	437-2938
• Operating pressure heating min./max. (PMS)		bar	1/6	1/6	1/6	1/6
• Operating temperature max. (T_{max})		°C	95	95	95	95
• Boiler water content ($V_{(H20)}$)		l	2 x 756	2 x 718	2 x 1211	2 x 1118
• Flow resistance boiler			see diagram			
• Minimum circulation water quantity		l/h	-	-	-	-
• Boiler weight (without water capacity, incl. cladding)		kg	2 x 1580	2 x 1635	2 x 2280	2 x 2445
• Boiler efficiency at 80/60 °C in full-load operation (NCV/GCV) [4]		%	98.2/88.5	98.2/88.5	98.2/88.5	98.2/88.5
• Boiler efficiency at 30 % partial load (NCV/GCV) [4]		%	109.0/98.2	108.6/97.8	108.7/97.9	108.5/97.7
• Room heating energy efficiency						
- without control	ηs	%	-	-	-	-
- with control	ηs	%	-	-	-	-
- with control and room sensor	ηs	%	-	-	-	-
- annual energy consumption	Q_{HE}	GJ	-	-	-	-
• NOx class (EN 15502)			6	6	6	6
• Nitrogen oxide emissions (EN 15502) (GCV)	NOx	mg/kWh	36	41	37	35
• Carbon monoxide emissions at 50/30 °C (related to 3 % of O_2)	CO	mg/Nm^3	25	26	23	23
• O_2 content in flue gas min./max. output		%	6.0/5.9	6.0/5.9	6.0/5.9	6.0/6.0
• Heat loss in standby mode (EN 15502) (50°C)		Watt	1200	1200	1480	1480
• Dimensions			see dimensional drawing			
• Gas flow pressure min./max.						
- Natural gas E/LL		mbar	17.4-300	17.4-300	17.4-300	17.4-300
- Propane		mbar	37-57	37-57	37-57	37-57
• Gas inlet pressure max. (idle pressure)		mbar	300	300	300	300
• Gas connection values at 15 °C/1013 mbar:						
- Natural gas E – (Wo = 15.0 kWh/m^3) NCV = 9.7 kWh/m^3		m^3/h	19.3-194.4	21.2-217.9	25.5-257.9	30.6-302.9
- Natural gas LL (G25) – (Wo = 12.4 kWh/m^3) NCV = 8.13 kWh/m^3		m^3/h	23.0-232.0	25.3-260.0	30.4-307.7	36.5-361.4
- Propane (G31) NCV = 24.4 kWh/m^3 [2]		m^3/h	10.9-77.3	12.6-86.6	15.2-102.5	17.9-120.4
• Operating voltage (50/60 Hz)		V	1 x 230 3 x 400	1 x 230 3 x 400	1 x 230 3 x 400	1 x 230 3 x 400
• Electrical power consumption min./max.		Watt	203/3746	203/3866	271/8222	301/8282
• Standby		Watt	7	7	5	7
• Type of protection		IP	20	20	20	20
• Permitted ambient temperature during operation		°C	5-40	5-40	5-40	5-40
• Sound power level						
- Heating noise (EN 15036 part 1) (room air dependent)		dB(A)	86	85	89	88
- Flue gas noise radiated from the mouth (DIN 45635 part 47) (room air dependent/independent of room air)		dB(A)	-	-	-	-
• Condensate quantity (natural gas) at 50/30 °C		l/h	136	144	200	276
• pH value of the condensate (approx.)		pH	4.2	4.2	4.2	4.2
• Construction			B23, B23P, C53, C63			
• Flue gas system						
- Temperature class			T120	T120	T120	T120
- Flue gas mass flow at max. nominal heat input (dry)		kg/h	2976	3338	3950	4460
- Flue gas mass flow at min. nominal heat input (dry)		kg/h	295	325	390	450
- Flue gas temperature at max. nominal heat output and 80/60 °C		°C	69	70	66	68
- Flue gas temperature at max. nominal heat output and 50/30 °C		°C	47	49	45	46
- Flue gas temperature at min. nominal heat output and 50/30 °C		°C	28	29	29	28
- Max. permissible temperature of the combustion air		°C	48	48	48	48
- Combustion air flow rate		Nm^3/h	2438	2732	3234	3660
- Maximum supply pressure for combustion air supply and flue gas line		Pa	60	60	60	60
- Maximum draught/underpressure at flue gas outlet		Pa	−30	−30	−30	−30

[1] In relation to natural gas G20 (100 % methane). With a hydrogen content (H_2) of up to 20 % by vol. in accordance with DVGW ZP3100 (D), an output reduction of up to 7 % is possible.

[2] Data related to NCV, conditional data

[3] Data related to NCV. The boiler series is tested for EE/H setting. With a factory setting to a Wobbe value of 15.0 kWh/m^3, operation in the Wobbe value range from 12.0 to 15.7 kWh/m3 is possible without resetting.

[4] Conversion acc. to EN 15502-1, Appendix J

Hoval UltraGas® 2 DH (1400-3100)

Type			DH (1400)	DH (2200)	DH (3100)
• Nominal heat output at 80/60 °C, natural gas [1]		kW	132-1306	203-2076	297-2894
• Nominal heat output at 50/30 °C, natural gas [1]		kW	146-1406	229-2224	324-3100
• Nominal heat output at 80/60 °C, propane [2]		kW	193-1286	299-2067	427-2877
• Nominal heat output at 50/30 °C, propane [2]		kW	208-1406	316-2224	453-3100
• Nominal heat input with natural gas [3]		kW	134-1336	206-2114	297-2938
• Nominal heat input with propane [2]		kW	201-1336	306-2114	437-2938
• Operating pressure heating min./max. (PMS)		bar	1/10	1/10	1/10
• Operating temperature max. (T_{max})		°C	95	95	95
• Boiler water content ($V_{(H20)}$)		l	2 x 509	2 x 709	2 x 1118
• Flow resistance boiler				see diagram	
• Minimum circulation water quantity		l/h	-	-	-
• Boiler weight (without water capacity, incl. cladding)		kg	2 x 1170	2 x 1735	2 x 2550
• Boiler efficiency at 80/60 °C in full-load operation (NCV/GCV) [4]		%	98.2/88.5	98.2/88.5	98.2/88.5
• Boiler efficiency at 30 % partial load (NCV/GCV) [4]			108.9/98.1	108.6/97.8	108.5/97.7
• Room heating energy efficiency					
- without control	ηs	%	-	-	-
- with control	ηs	%	-	-	-
- with control and room sensor	ηs	%	-	-	-
- annual energy consumption	Q_{HE}	GJ	-	-	-
• NOx class (EN 15502)			6	6	6
• Nitrogen oxide emissions (EN 15502) (GCV)	NOx	mg/kWh	40	41	35
• Carbon monoxide emissions at 50/30 °C (related to 3 % of O_2)	CO	mg/Nm^3	26	26	23
• O_2 content in flue gas min./max. output		%	6.0/5.7	6.0/5.9	6.0/6.0
• Heat loss in standby mode (EN 15502) (50°C)		Watt	1080	1200	1480
• Dimensions				see dimensional drawing	
• Gas flow pressure min./max.					
- Natural gas E/LL		mbar	17.4-80	17.4-300	17.4-300
- Propane		mbar	37-57	37-57	37-57
• Gas inlet pressure max. (idle pressure)		mbar	80	300	300
• Gas connection values at 15 °C/1013 mbar:					
- Natural gas E – (Wo = 15.0 kWh/m^3) NCV = 9.7 kWh/m^3		m^3/h	13.8-137.7	21.2-217.9	30.6-302.9
- Natural gas LL (G25) – (Wo = 12.4 kWh/m^3) NCV = 8.13 kWh/m^3		m^3/h	16.5-164.3	25.3-260.0	36.5-361.4
- Propane (G31) NCV = 24.4 kWh/m^3 [2]		m^3/h	8.2-54.8	12.6-86.6	17.9-120.4
• Operating voltage (50/60 Hz)		V	1 x 230	1 x 230 3 x 400	1 x 230 3 x 400
• Electrical power consumption min./max.		Watt	67/2120	203/3866	301/8282
• Standby		Watt	5	7	7
• Type of protection		IP	20	20	20
• Permitted ambient temperature during operation		°C	5-40	5-40	5-40
• Sound power level					
- Heating noise (EN 15036 part 1) (room air dependent)		dB(A)	79	85	88
- Flue gas noise radiated from the mouth (DIN 45635 part 47) (room air dependent/independent of room air)		dB(A)	71	-	-
• Condensate quantity (natural gas) at 50/30 °C		l/h	96	144	276
• pH value of the condensate (approx.)		pH	4.2	4.2	4.2
• Construction				B23, B23P, C53, C63	
• Flue gas system					
- Temperature class			T120	T120	T120
- Flue gas mass flow at max. nominal heat input (dry)			2110	3338	4460
- Flue gas mass flow at min. nominal heat input (dry)			211	325	450
- Flue gas temperature at max. nominal heat output and 80/60 °C		°C	69	70	68
- Flue gas temperature at max. nominal heat output and 50/30 °C		°C	49	49	46
- Flue gas temperature at min. nominal heat output and 50/30 °C		°C	29	29	28
- Max. permissible temperature of the combustion air		°C	48	48	48
- Combustion air flow rate		Nm^3/h	1726	2732	3660
- Maximum supply pressure for combustion air supply and flue gas line		Pa	60	60	60
- Maximum draught/underpressure at flue gas outlet		Pa	−30	−30	−30

[1] In relation to natural gas G20 (100 % methane). With a hydrogen content (H_2) of up to 20 % by vol. in accordance with DVGW ZP3100 (D), an output reduction of up to 7 % is possible.

[2] Data related to NCV, conditional data

[3] Data related to NCV. The boiler series is tested for EE/H setting. With a factory setting to a Wobbe value of 15.0 kWh/m^3, operation in the Wobbe value range from 12.0 to 15.7 kWh/m^3 is possible without resetting.

[4] Conversion acc. to EN 15502-1, Appendix J

Flow resistance on the heating water side

UltraGas® 2 D (250,300)

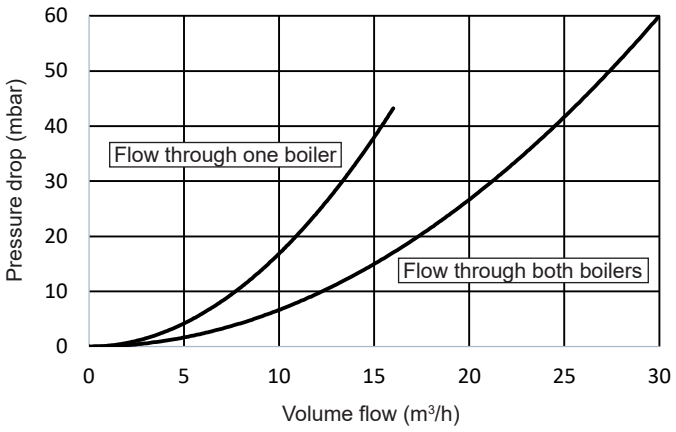

UltraGas® 2 D (380,460)

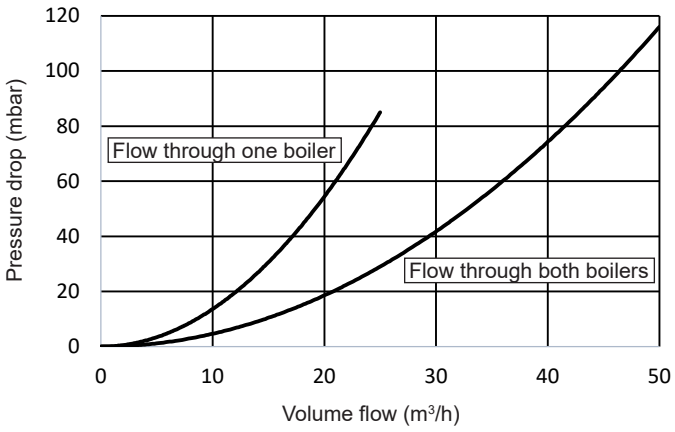

UltraGas® 2 D (600-900)

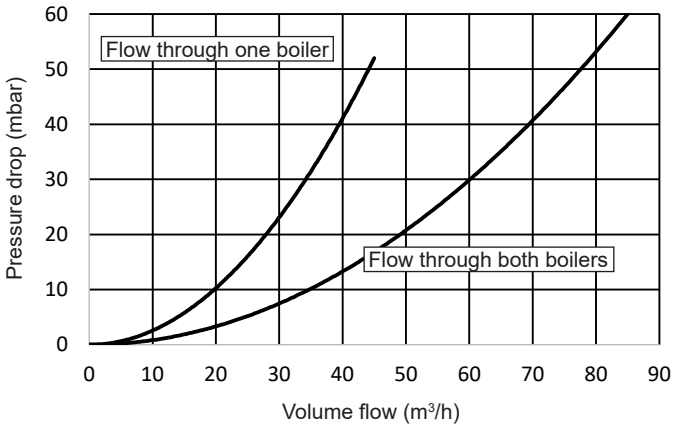

UltraGas® 2 D (1000-1400)

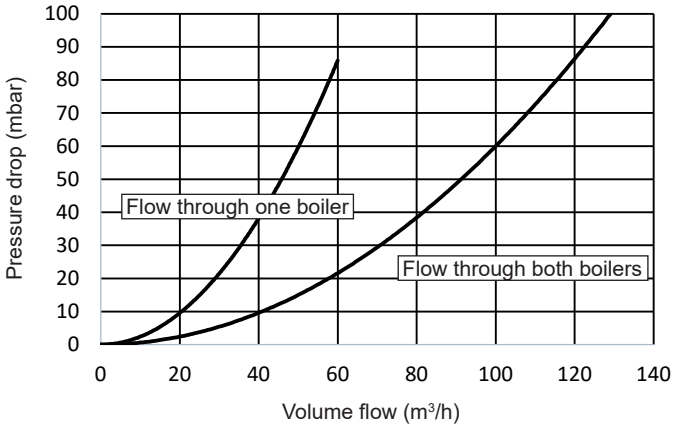

UltraGas® 2 D (1600-2200)

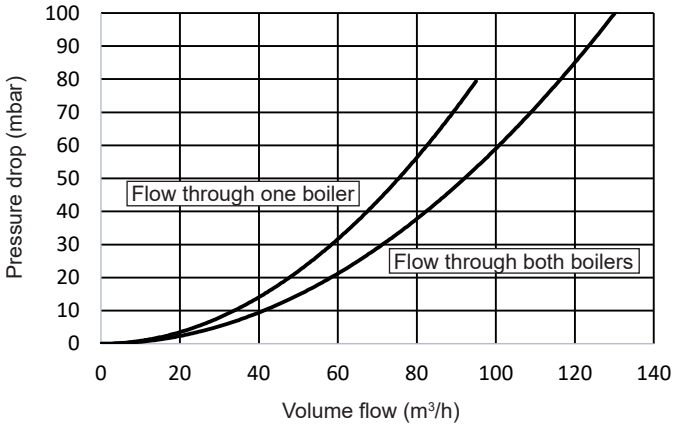

UltraGas® 2 D (2600,3100)

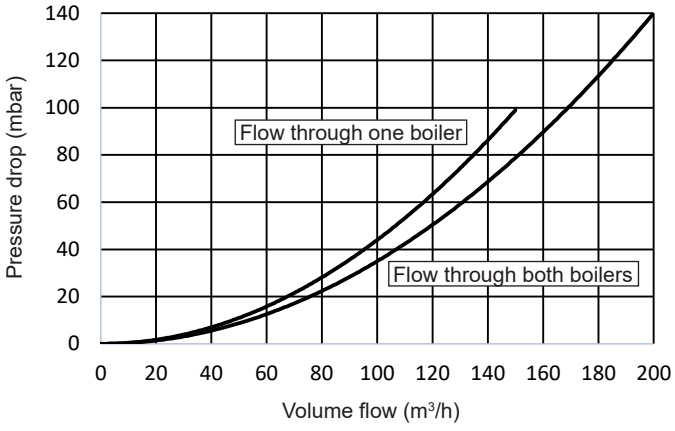

UltraGas® 2 D (250-3100)

(Dimensions in mm)

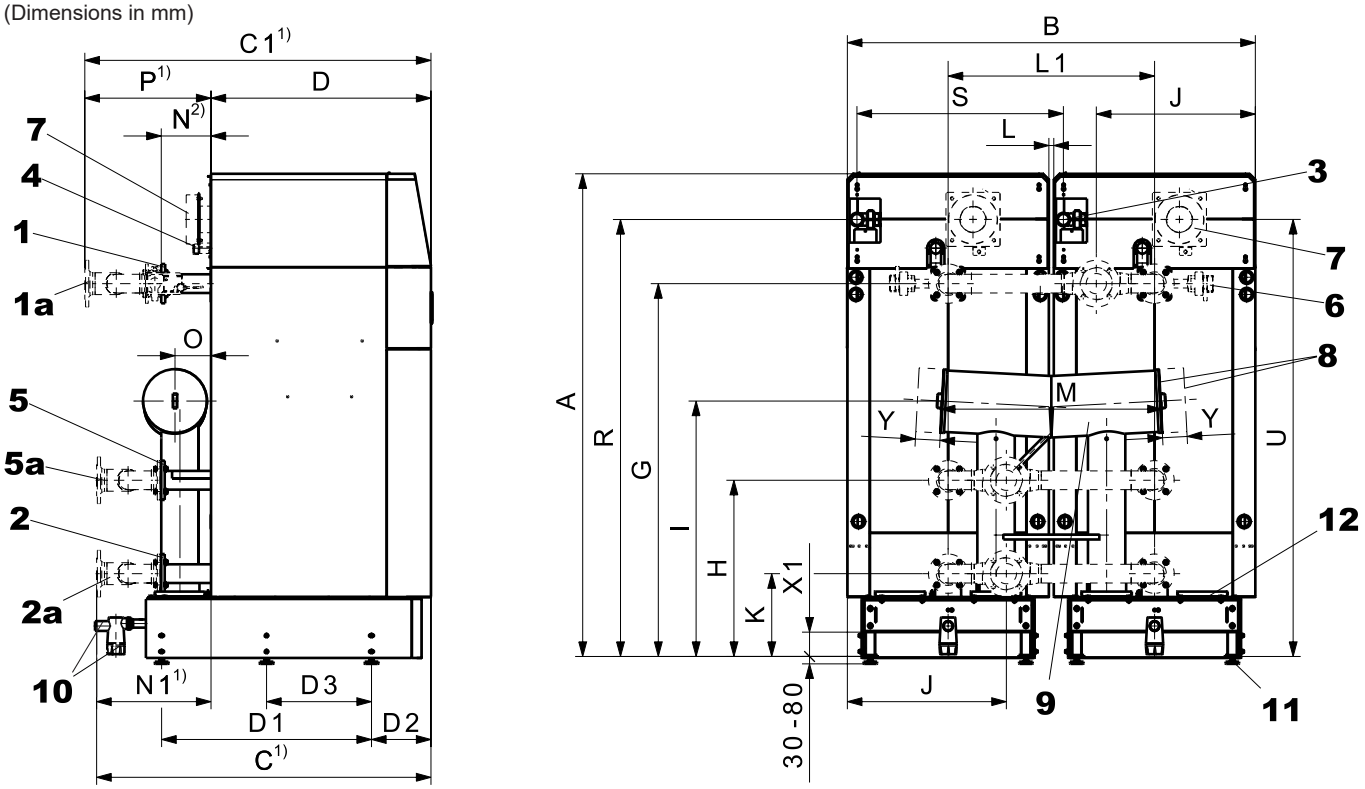

1 Flow heating
1a Hydraulic connection flow (option) 2)
2 Low-temperature return
2a Hydraulic connection low-temperature return (option) 2)
3 Gas connection
4 Safety flow (safety valve, air vent)
5 High-temperature return
5a Hydraulic connection high-temperature return (option) 2)
6 Hydraulic shut-off valve (option)
7 Combustion air intake connector (option)
8 Flue gas outlet connection left or right
9 Flue gas collector
10 Condensate drain with siphon and screw connection for plastic pipe
11 Boiler feet (adjustable 30-80 mm)
12 Cleaning opening

Notice
For subsequent technical details, see single boiler UltraGas® 2 (125-1550):
- Detailed dimensions and dimensions for multi-part installation
- Mounting position of system flow sensor
- Safety fitting pipe flow/return for mounting the protection set and diaphragm pressure expansion tank

Type	A	B	C 1)	C1 1)	D	D1	D2	D3	G	H	I	J	K	L	L1	M	N 2)	N1 1)	O	P 1)	R	S	U	X1	Y
D (250,300)	1923	1560	1269	1317	799	754	242	-	1479	714	1116	597	334	120	840	902	207	470	142	518	1725	840	1725	99	-
D (380,460)	1968	1660	1363	1411	895	854	242	-	1517	717	1116	647	337	20	840	902	204	468	147	516	1778	840	1778	99	-
D (600-1000)	1923	1880	1807	1864	1165	1204	242	-	1447	745	1143	814	365	20	950	930	285	642	176	699	1735	950	1736	96	-
D (1240,1400)	2234	2240	1827	1884	1184	1294	242	-	1564	757	1195	904	377	20	1130	1019	286	643	205	700	1966	1130	1938	89	-
D (1600-2200)	2255	2600	2158	2218	1364	1480	242	-	1573	788	1280	1054	408	20	1310	1018	378	794	228	854	1959	1310	1959	89	-
D (2600,3100)	2395	3150	2571	2631	1640	1790	250	895	1600	822	1231	1339	442	30	1590	1322	420	931	240	991	2064	1590	2064	89	495
DH (1400)	2234	2240	1827	1884	1184	1294	242	-	1564	757	1195	904	377	20	1130	1019	286	643	205	700	1966	1130	1938	89	-
DH (2200)	2255	2600	-	-	1364	1480	242	-	1573	788	1280	1054	408	20	1310	1018	378	-	228	-	1959	1310	1959	89	-
DH (3100)	2395	3150	-	-	1640	1790	250	895	1600	822	1231	1339	442	30	1590	1322	390	-	240	-	2064	1590	2064	89	495

Type	1,2,5 3)	1a,2a,5a 2), 3)	3	4	7	8	10
D (250,300)	DN 65 / PN 6 / 4-hole	DN 80 / PN 6 / 4-hole	Rp 1″	R 1″	Ø 122/125	Ø 254/256	DN 40
D (380,460)	DN 65 / PN 6 / 4-hole	DN 80 / PN 6 / 4-hole	Rp 1½″	R 1¼″	Ø 197/200	Ø 254/256	DN 40
D (600-1000)	DN 100 / PN 6 / 4-hole	DN 125 / PN 6 / 8-hole	Rp 1½″	R 1½″	Ø 197/200	Ø 306/308	DN 40
D (1240,1400)	DN 100 / PN 6 / 4-hole	DN 125 / PN 6 / 8-hole	Rp 2″	R 2″	Ø 247/250	Ø 356/358	DN 40
D (1600-2200)	DN 125 / PN 6 / 8-hole	DN 150 / PN 6 / 8-hole	Rp 2″	R 2″	Ø 247/250	Ø 402/404	DN 40
D (2600,3100)	DN 150 / PN 6 / 8-hole	DN 200 / PN 6 / 8-hole	Rp 2″	R 2″	Ø 247/250	Ø 504/506	DN 40
DH (1400)	DN 100 / PN 16 / 4-hole	-	Rp 2″	R 2″	Ø 247/250	Ø 356/358	DN 40
DH (2200)	DN 125 / PN 16 / 8-hole	-	Rp 2″	R 2″	Ø 247/250	Ø 402/404	DN 40
DH (3100)	DN 150 / PN 16 / 8-hole	-	Rp 2″	R 2″	Ø 247/250	Ø 504/506	DN 40

1) UltraGas® 2 D: dimensions incl. hydraulic connections and hydraulic butterfly valves
2) UltraGas® 2 D and UltraGas® 2 DH: dimensions without hydraulic connection and hydraulic butterfly valve
No hydraulic connections of the double boilers are available for UltraGas® 2 DH.
3) DN = nominal diameter, PN = nominal pressure

Space requirements

UltraGas® 2 D (250-3100)
(Dimensions in mm)

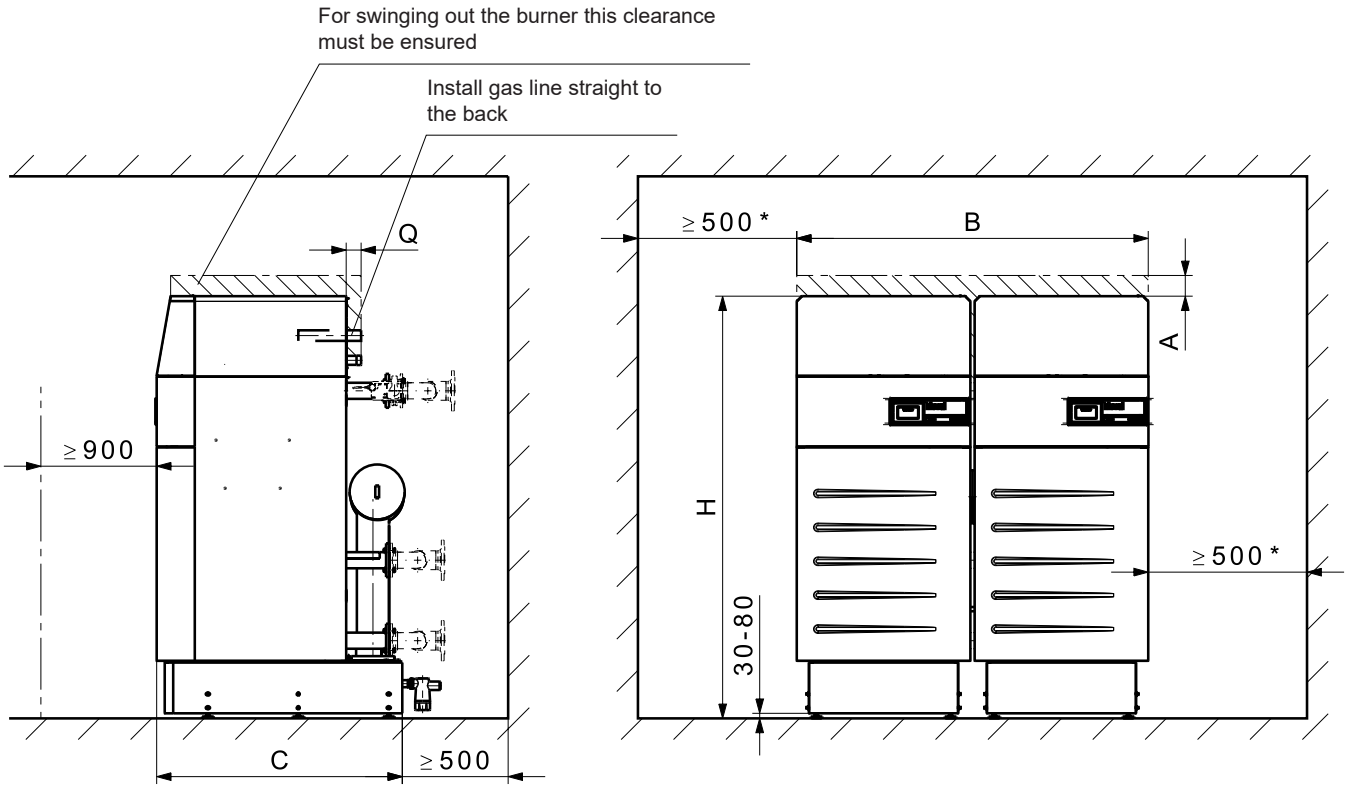

≥1000 with hydraulic connection set

UltraGas® 2 type	A [1]	A minimum [2]	B	C	H [3]	H minimum [4]	Q
D (250,300)	169	106	1560	1060	1953	1934	125
D (380,460)	155	71	1660	1160	1998	1979	2
D (600-1000)	513	156	1880	1510	1953	1937	60
D (1240,1400)	121	121	2240	1600	2264	2255	155
D (1600-2200)	280	195	2600	1786	2285	2276	119
D (2600,3100)	291	154	3150	2104	2425	2416	163
DH (1400)	121	121	2240	1600	2264	2255	155
DH (2200)	280	195	2600	1786	2285	2276	119
DH (3100)	291	154	3150	2104	2425	2416	163

[1] If room height is too small: Reduction of dimension possible (see A minimum).
[2] **Attention!** With A minimum the burner can not be swung out completely anymore! Cleaning with UltraGas® 2 D (250-460) and UltraGas® 2 D (1240-3100) still possible
[3] Height value assumes adjustable feet are set to 30 mm
[4] The base plates cannot be installed without feet and the installer will have to fit a siphon with min. 70 mm barrier height. For details see next page.

- The heat generator can be placed with one side directly on the wall. However, to protect heat-sensitive walls against damage, a distance of at least 150 mm from the wall must be provided.
- The cleaning opening must be easily accessible. As a result, a minimum distance of 500 mm must be maintained on the cleaning opening side.

UltraGas® 2 (250-3100) with masonry base and adjustable feet

(Dimensions in mm)

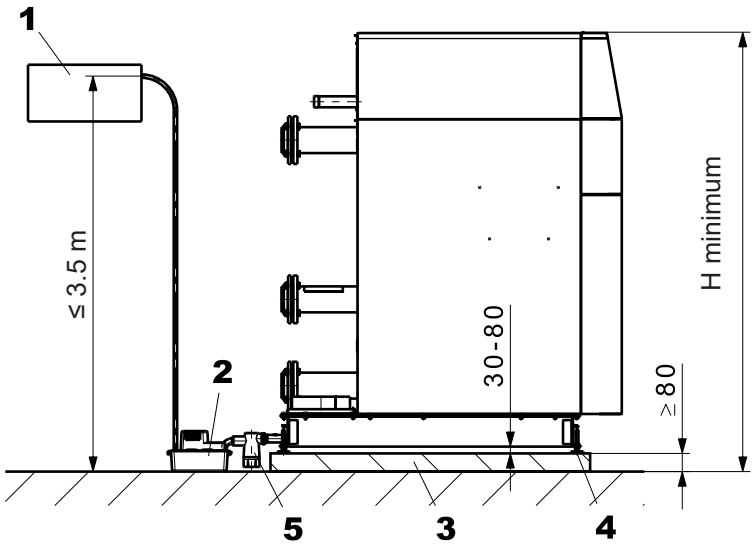

UltraGas® 2 type	H minimum [1]
D (250,300)	1934
D (380,460)	1979
D (600-1000)	1937
D (1240,1400)	2255
D (1600-2200)	2276
D (2600,3100)	2416
DH (1400)	2255
DH (2200)	2276
DH (3100)	2416

UltraGas® 2 (250-3100) with masonry base without adjustable feet

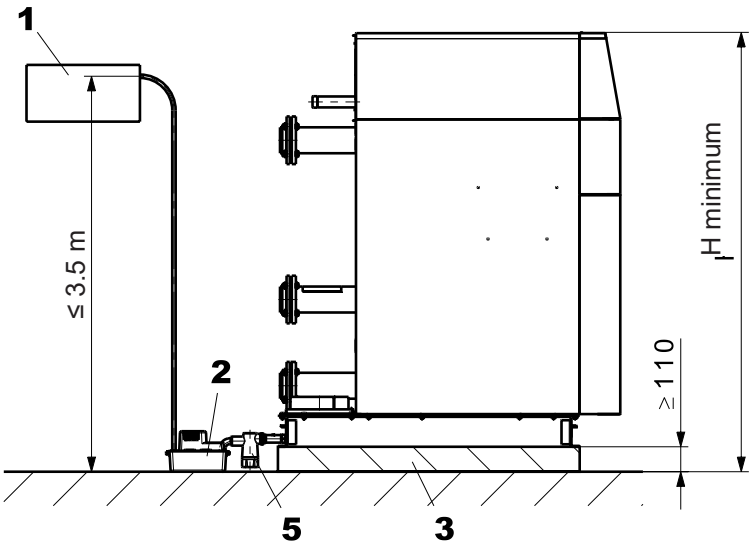

UltraGas® 2 type	H minimum [1]
D (250,300)	1934
D (380,460)	1979
D (600-1000)	1937
D (1240-1400)	2255
D (1600-2200)	2276
D (2600,3100)	2416
DH (1400)	2255
DH (2200)	2276
DH (3100)	2416

1 Neutralisation unit (option)
2 Condensate pump (option)
3 Masonry base
4 Feet adjustable up to 30-80 mm
5 Siphon [2]

[1] Height value assumes adjustable feet are set to 30 mm
[2] **Caution!** The installer will have to fit a siphon with min. 70 mm barrier height.

Notice

- The steps of the climbing aid provided must be horizontal. Adapt the climbing aid if necessary.
- Base plates and feeds will not be re-funded!
- With H minimum, cleaning the siphon is more difficult.

Neutralisation unit HNB-0400 to HNB-1600

(Dimensions in mm)

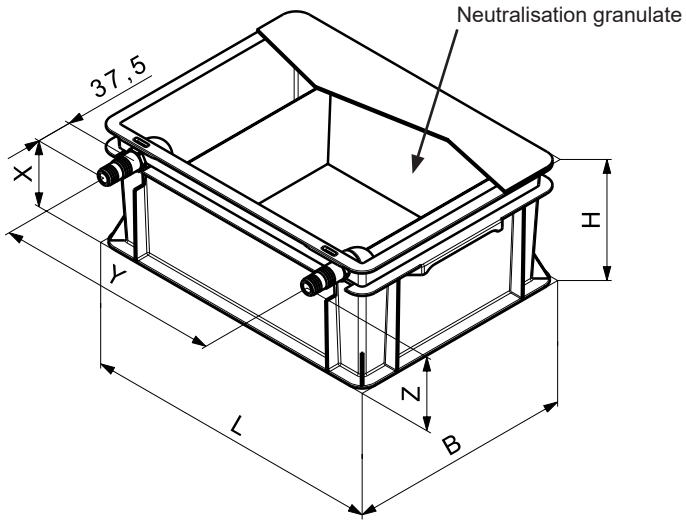

	HNB-0400,-0800	HNB-1200,-1600
Dimensions (L x W x H)	405 x 300 x 180 mm	605 x 400 x 180 mm
Inlet height (Z)	128 mm	
Drain height (X)	118 mm	
Distance between the connections (Y)	approx. 350 mm	approx. 550 mm

Neutralisation unit HNB-0400,-0800 and condensate pump

(Dimensions in mm)

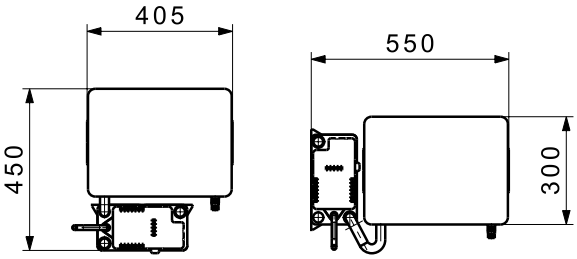

Neutralisation unit HNB-1200,-1600 and condensate pump

(Dimensions in mm)

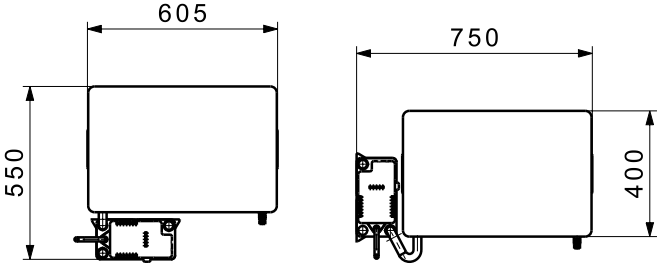

Gas ball valves TAS (thermally activating shut-off device) with flange

(Dimensions in mm)

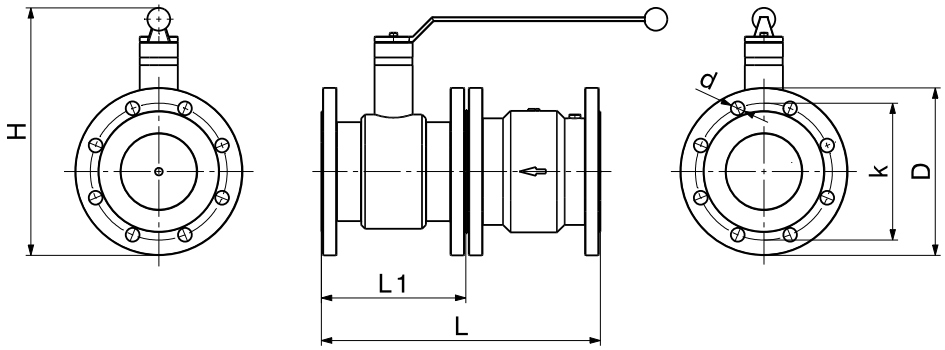

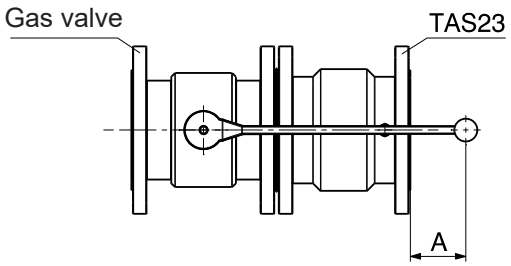

TAS type	L	L1	H	D	k	d/number of flange holes	A
DN 65	297	170	262.8	185	145	18/4	3
DN 80	307	180	298.3	200	160	18/8	128
DN 100	367	190	325.3	218	180	18/8	73

Standards and guidelines

The official regulations for installation and operation must be observed. In particular, these are the country-specific standards (e.g. EN standard, DIN standards, etc.) as well as the corresponding regional regulations.

The following standards and guidelines must be complied with:

- Hoval technical information and installation instructions
- hydraulic and technical control regulations of Hoval
- DVGW directives
- DIN EN 12828
  Safety-relevant requirements
- DIN EN 12831 Heaters
  Rules for the calculation of the heat requirements of buildings
- VDI 2035
  Protection against damage by corrosion and boiler scale formation in heating and service water installations
- EN 14868
  "Protection of metallic materials against corrosion"
- VDE 0100 supplement 2

Water quality in heating systems

Filling and replacement water, heating water

The following applies:

- VDI 2035
- In addition, the EN 14868 standard must be applied, **as well as the manufacturer-specific specifications**

Manufacturer-specific specifications

Filling and replacement water

The filling and replacement water can be both fully demineralised and also merely softened.

Heating water

- In the case of **full demineralisation of the filling and replacement water**, the electrical conductivity of the heating water must not exceed the value of 100 µS/cm.
- In the case of **softening the filling and replacement water**, the following conditions must be complied with:
  The quality of the heating water must be checked and documented periodically:
  - For an installed heat output above 100 kW up to and including 1000 kW, an annual check of the heating water is required.
  - For an installed heat output above 1000 kW, an check of the heating water is required twice a year.

  The following standard values for the heating water must be measured and adhered to:
  - Electrical conductivity of the heating water for operation with water containing salts: > 100 µS/cm to ≤ 1500 µS/cm
  - pH value of the heating water for systems without aluminium alloy as water-side material 8.2 to 10.0 (measurement 10 weeks after commissioning at the earliest)
- The sum of the chloride, nitrate and sulphate contents in the heating water must not exceed 50 mg/l in total.

Additional notices

- Hoval boilers and calorifiers are suitable for heating systems without significant oxygen intake. (System type I according to EN 14868).
- Plants with continual oxygen intake (e.g. underfloor heating without diffusion-proof plastic piping) or intermittent oxygen intake (e.g. requiring frequent topping-up) must be equipped with a system separation.
- In the case of bivalent heating systems, the values of the heat generator with the strictest requirement for water quality must be complied with.
- If only the boiler is replaced in an existing plant, it is not recommended for the entire heating system to be refilled, provided that the heating water already contained in the system complies with the relevant directives or standards.
- Before filling new systems and, where necessary, existing heating systems containing heating water that does not comply with the directives or standards, the heating system must be professionally cleaned and flushed. The boiler must not be filled until the heating system has been flushed.

Frost protection agent

see separate engineering sheet "Use of frost protection agent".

Heating room

- Boilers cannot be positioned in rooms in which halogen compounds can occur and into which combustion air can enter (e.g. laundrettes, hairdressers).
- Halogen compounds can be caused by cleaning and degreasing solutions, dissolvents, glue and bleaching lyes. Pay attention to the Procal leaflet, corrosion through halogen compounds.

Combustion air supply

The supply of combustion air must be guaranteed. There must be no possibility to close the air supply opening. For direct combustion air to boiler mount the connection for direct combustion air inlet. It is very important to ensure that the combustion air is free from halogen compounds. These are present, for example, in spray cans, varnishes, glues, solvents and cleansing agents.

For the version with common flue gas line with overpressure, the flue gas excess pressure set must be imperatively mounted!

The minimum free cross-section for the combustion air can be assumed simplified as follows:

- *Room air-independent operation with separate combustion air pipe to the boiler:*
  0.8 cm² per 1 kW of output. The pressure drop in the combustion air pipe must be considered for the calculation of the flue gas system.
- In the UltraGas® 2, ventilation of the installation or boiler room must be guaranteed for operation independent from the room air.
- *Room air-dependent operation:*
  Minimum free cross-section of the opening into the open: 150 cm² or twice 75 cm² and additionally 2 cm² necessary for each kW of output over 50 kW for vent into the open.

Gas connection

Commissioning

- Initial commissioning must be performed by a specialist technician from Hoval or a gas specialist technician.
- Burner setting values according to the installation instructions.

Manual gas shut-off tap and gas filter

Immediately in front of the boiler a manual gas shut-off device (tap) must be installed according to relevant regulations.

In the UltraGas® 2 (400-1550) type, an external gas filter must be installed in the gas supply line.
Make sure that the gas line from the external gas filter to the gas connection of the boiler is cleaned.
For the UltraGas® 2 (125-350) types, it is necessary to comply with the local regulations concerning the need for a gas filter.

Construction of a recommended gas connection

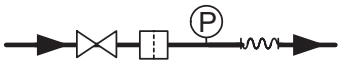

Legend:


manual gas shut-off valve


gas hose/compensator


gas filter



pressure gauge with test burner and push-button valve

Type of gas

- The boiler is only to be operated with the type of gas stated on the rating plate.

Gas pressure natural gas

Necessary gas flow pressure at the boiler inlet:
UltraGas® 2 D (250-1400) min. 17.4 mbar, max. 80 mbar
UltraGas® 2 D (1600-3100) min. 17.4 mbar, max. 300 mbar

Gas pressure propane

- A gas pressure controller to reduce the boiler inlet pressure must be installed on-site for propane.
- Necessary gas flow pressure at the boiler inlet:
  UltraGas® 2 (125-1550)
  min. 37 mbar, max. 50 mbar

Gas pressure regulator

- The installation of a gas pressure regulator is only necessary if the gas flow pressure in the gas network exceeds the maximum permissible gas flow pressure of the UltraGas® 2 D or if there are considerable fluctuations in the gas flow pressure.

- Pressure fluctuations in the gas network must be prevented by suitable measures (e.g. gas storage tanks or pressure regulators). The local conditions must be checked in each individual case.

Closed heating system
The boiler is only approved for use in closed heating systems.

Minimum circulation water quantity
No minimum water circulation volume is required.

Calorifier connection
If a calorifier is connected, all heating groups must be provided with a mixer.

Installation instructions
Please observe the installation instructions supplied with every boiler.

Space requirements
See “Dimensions” for information

Pump follow-on
For operating temperatures of the boiler above 85 °C, after each burner switch-off, the circulating pump must be in operation for at least 2 minutes (the pump after-run is included in the boiler controller with TopTronic© E control).

Heating boiler in the attic
If the gas boiler is positioned on the top floor, the installation of a low water protection, which automatically turns the gas burner off in case of water shortage, is recommended.

Condensate drain
- A permit for discharge of the flue gas condensate into the sewage system must be obtained from the relevant authority or sewer operator.
- The condensate from the flue gas system can be discharged through the boiler. A condensate trap is not needed anymore with the flue gas system.
- The condensate must be conducted openly (funnel) into the sewage system.
- Suitable materials for condensate drain:
  - stoneware pipes
  - pipes made from glass
  - pipes made from stainless steel
  - pipes made from plastic: PVC, PE, PP, ABS and UP
- A siphon must be installed at the condensate outlet on the gas boiler (included in the boiler scope of delivery).

Diaphragm pressure expansion tank
- An adequately dimensioned diaphragm pressure expansion tank must be provided.
- The diaphragm pressure expansion tank has to be installed in principle at the heating return, or at the safety flow.
- Starting from 70 °C an intermediate tank is necessary.

Safety valve
- At the safety flow a safety valve and an automatic exhauster must be installed.

Noise damping
The following measures are possible for sound insulation:
- Make boiler room walls, ceiling and floor as solid as possible.
- If there are living areas above or below the boiler room, connect pipes flexibly using expansion joints.
- Connect circulating pumps to the piping network using expansion joints

Noise level
- The acoustic power level value is dependent on the local and spacial circumstances.
- The acoustic pressure level is dependent on the installation conditions and can for instance be 5 to 10 dB(A) lower than the acoustic power level at a distance of 1 m.

Recommendation:
If the combustion air intake opening is located on the house facade near a noise-sensitive place (window of bedroom, garden terrace, etc.), we recommend using a silencer in the combustion air duct.

Flue gas system
- Gas boilers must be connected to a certified and approved flue gas system such as flue gas lines.
- Flue gas lines must be gas-, condensate- and over pressure-tight.
- The flue gas lines must be secured against unwanted loosening of the plug connections.
- The flue gas system must be connected with an angle, so that the resulting condensate of the flue gas system can flow back to the boiler and can be neutralised there before discharging into the canalisation.
- Gas boilers with condensation heat utilisation are to be connected to a flue gas line min. temperature class T120.
- A flue gas temperature limiter is integrated into the boiler.

Allocation of gas filters for UltraGas® 2

UltraGas® 2 type	Gas throughput m^3/h	Gas filter type	Dimension	Pressure drop gas filter (with clean filter) mbar
(125)	11.9	70602/6B	Rp 1″	0.2
(150)	14.2	70602/6B	Rp 1″	0.3
(190)	18.0	70603/6B	Rp 1½″	0.2
(230)	22.4	70603/6B	Rp 1½″	0.2
(300)	29.2	70603/6B	Rp 1½″	0.3
(350)	33.9	70603/6B	Rp 1½″	0.4
(400)	38.6	70603/6B	Rp 1½″	0.6
(450)	44.0	70603/6B	Rp 1½″	0.7
(500)	46.4	70631/6B	Rp 2″	0.5
(620)	59.3	70631/6B	Rp 2″	0.7
(700)	67.0	70631/6B	Rp 2″	0.8
(800)	76.1	70631/6B	Rp 2″	0.9
(1000)	94.6	70631/6B	Rp 2″	1.4
(1100)	106.0	70631/6B	Rp 2″	1.6
(1300)	125.5	70610F/6B	DN 65	1.5
(1550)	147.3	70610F/6B	DN 65	2.1

Standard values for flue gas line dimensions

Standard values for the flue gas line dimensions can be found in the following table.

Table with bases for calculation

- Calculation based on max. 1000 m above sea level.
- Installation room with supply air opening (room air dependent operation)
- An individual calculation must be carried out for room air-independent operation (accessories as option) or a combustion air supply via a duct.
- Connecting line was calculated with max. 5 m.
- Flue gas overpressure set: Mandatory, included in the scope of delivery!

- The first 2 m of the flue gas line must be configured with the same dimension as the flue gas connector, after which the size of the flue gas system can be selected according to the table below.

Table "Standard values for flue gas line dimensions"

Boiler		Flue gas line (smooth walled)	Number of elbows 90° (flue gas + combustion air)			
UltraGas® 2	Internal Ø flue gas outlet	Designation	Total pipe length in m (flue gas + combustion air)			
type	mm	DN	1	2	3	4
D (250)	254	200	45	44	43	43
D (300)	254		44	43	43	42
D (380)	254	225	46	45	44	43
D (460)	254	250	47	46	45	44
D (600)	306	300	48	47	46	45
D (700)	306		47	46	45	44
D (800)	306		46	45	44	43
D (900)	306	350	50	50	50	50
D (1000)	306		48	48	47	46
D (1240)	356		47	46	45	44
D (1400)	356	400	48	47	46	45
D (1600)	402		46	45	44	43
D (2000)	402	450	47	46	45	44
D (2200)	402	500	46	45	44	43
D (2600)	504		48	48	47	46
D (3100)	504		48	47	46	45
DH (1400)	356	400	48	47	46	45
DH (2200)	402	500	46	45	44	43
DH (3100)	504		48	47	46	45

Notice: The values in the table "Standard values for flue gas line dimensions" are standard values for reference.
An exact calculation for the flue gas duct must be made on-site.
For chimney systems above 25 m effective height, negative pressure in the chimney is to be expected in some operating conditions.
Therefore, we recommend an individual design of the chimney system and checking the individual pressure conditions.

Hoval quality.
You can count on us.

Hoval

Hoval is one of the leading international companies for heating and indoor climate solutions. Drawing on more than 80 years of experience and benefiting from a close-knit team culture, the Hoval Group delivers exciting solutions and develops technically superior products. This leadership role requires a sense of responsibility for energy and the environment, which is expressed in an intelligent combination of different heating technologies and customised indoor climate solutions.

Hoval also provides personal consultations and comprehensive customer service. With around 2500 employees in 15 companies around the world, Hoval sees itself not as a conglomerate, but as a large family that thinks and acts globally.
Hoval heating and indoor climate solutions are currently exported to more than 50 countries.

Responsibility for energy and environment

Liechtenstein
Hoval Aktiengesellschaft
9490 Vaduz
+423 399 24 00
hoval.com

United Kingdom
Hoval Ltd.
Newark Notts. NG 24 1JN
+44 1636 672 711
hoval.co.uk

2026 - 04 | Subject to modifications

Your Hoval partner